APV
AN SPX BRAND

Operating Manual

DELTA DA3+ SLD

Double Seat Valve

Read and understand this manual prior to operating or servicing this product.

SPX

UK

APV
AN SPX BRAND

CE

Declaration of Conformity for Valves and Valve Manifolds

APV Rosista GmbH, Zechenstr. 49, D-59425 Unna-Königsborn
as manufacturer with sole responsibility declares that the

double seat valves of the series D2, SD4, SDT4, SDM4, SWcip4, DSV, DA3, DE3, DEU3, DET3, DKR2, DKRT2, DKRH2
in the nominal diameters DN 25 - 150, 1" – 6" and 1 Sh5 - 6 Sh5

butterfly valves of the series SV1 and SVS 1 F
in the nominal diameters DN 25 - 100, DN 125 - 250 and 1" – 4"

ball cocks of the series KH, KHV
in the nominal diameters DN 15 - 100

single seat, diaphragm and spring loaded valves of the series S2, SW4, SWmini4, SWT4, M3, MF3, M4, MF4, MP4, MS4, AP1, APT1, CPV, RG4, RGM4, RGE4, RGEM4, PR2, PR3, PR4, SI2, UF3, VRA,VRAH
in the nominal diameters DN 10 - 150, 1/2" – 4" and 1 Sh5 - 6 Sh5

and the valve manifolds installed thereof

meet the requirements of the Directives 89/392/EEC (amendment 93/44/EEC), replaced by 98/37/EC and GSG - 9.GSGV.

For official inspections, APV Rosista GmbH presents a technical documentation according to appendix V of the Machinery Directive, this documentation consisting of documents of the development and construction, description of measures taken to meet the conformity and to correspond with the basic requirements on safety and health, incl. an analysis of the remaining risks as well as an operating manual with safety instructions.

The conformity of the valves and valve manifolds is guaranteed.

D-59425 Unna-Königsborn, June 04, 2008
APV Rosista GmbH

ppa. Baumbach

Manager Research and Development

Content :

Page:

1. General Terms

This operating manual should be read carefully by the competent operating and maintenance personnel.

We point out that we will not accept any liability for damage or malfunctions resulting from the non-compliance with this operating manual.

Descriptions and data given herein are subject to technical changes.

2. Safety Instructions

DANGER!

- The technical safety symbol draws your attention to important directions of operating safety. You will find it wherever the activities described are bearing risks of personal injury.
- Disconnect electrical and pneumatic connections.
- Depressurize the line and cleaning system and discharge the lines, if possible, before any maintenance work.
- Observe Service Instructions to ensure safe maintenance of the valve.
- Connections which are not used must be sealed by a plug.
- A safe discharge of the cleaning liquids must be ensured.
- The valve must only be assembled, disassembled and reassembled by persons who have been trained in APV valves or by APV service team members. If necessary, contact your local APV representative.
- Welded actuators are preloaded by spring force.
  Opening of the actuators is strictly forbidden.
  Danger to life!

  Actuators which are no longer used and / or defective must be disposed in professional manner.

  Defective actuators must be returned to your APV Solutions & Services company for their professional disposal and free of charge for you.

  Please address to your local APV representative.

3. Mode of Operation

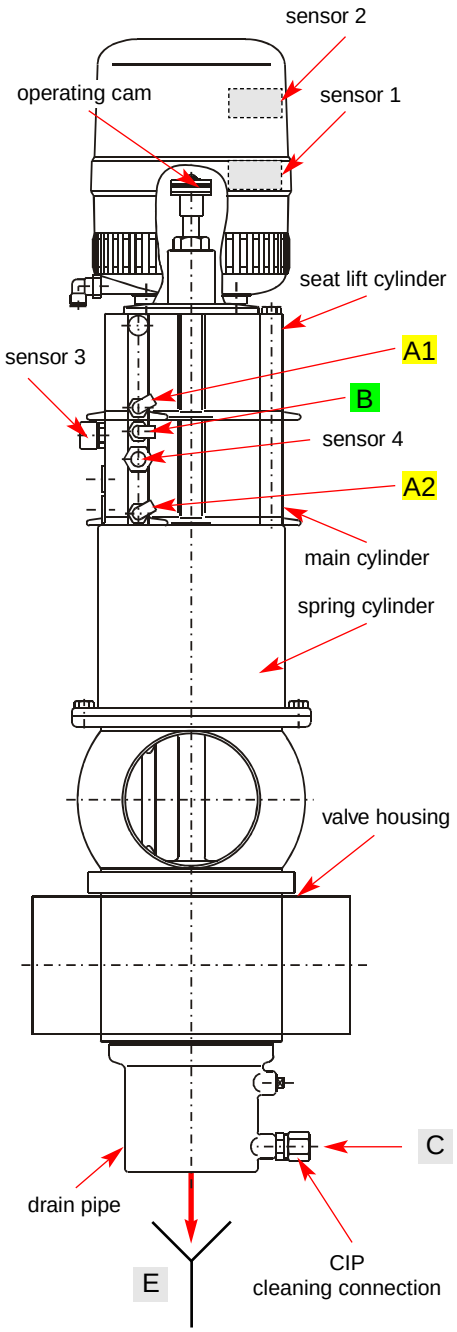

Due to its construction and mode of operation as well as to the use of high quality stainless steel and adequate seal materials, the double-seat mixproof valve DELTA DA3+SLD is suited for applications in the food and beverage industries as well as in the pharmaceutical and chemical industries.

- The valve opens from the top to the bottom in low leakage operation (unpressurized drain of fluid residues via the annular cleaning gaps in the seat area).

- Separation of two line passages by two balanced and independently operating valve slides with intervening leakage chamber.

- Arising leakages at the seat seals are discharged at **(E)** in depressurized state.

- The standard double seat valve DELTA DA3+ SLD is equipped with a Control Unit.
  The 2 Hall sensors in the control unit and the two externally installed proximity switches provide for the detection of the following valve positions:

  sensor 1 = valve position ***"seat lifting lower valve shaft"***
  sensor 2 = valve position ***"open"***
  sensor 3 = valve position ***"closed"***
  sensor 4 = valve position ***"seat lifting upper valve shaft"***

- Operation by pneumatic actuator with air connection at **(B)**.
  Reset by spring force into the safety limit position "closed".

  B = Valve open

- Maintainable actuator (see **11.3**).

- Cleaning of the leakage chamber is undertaken via the cleaning connection **(C)**.

- The Cleaning of the seat and shaft seal areas is realized by operation of the air connections:

  A1 = lifting of lower shaft

  A2 = lifting of upper shaft

- Reset by spring force.

3. Mode of Operation

fig. 3.1

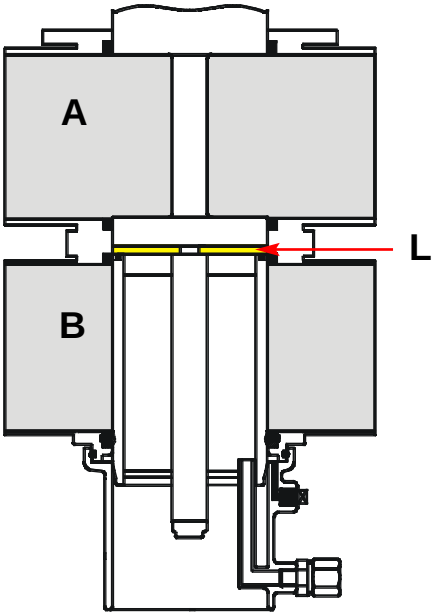

3.1 Valve in "closed" position

The lower and upper valve shafts are closed by spring force and safely separate the different fluids A and B. The leakage chamber **L** which is situated between the two valve shafts, provides for a free and absolutely depressurized discharge to the bottom. The valve shafts are balanced and, thus, safe against pressure hammers.

fig. 3.2

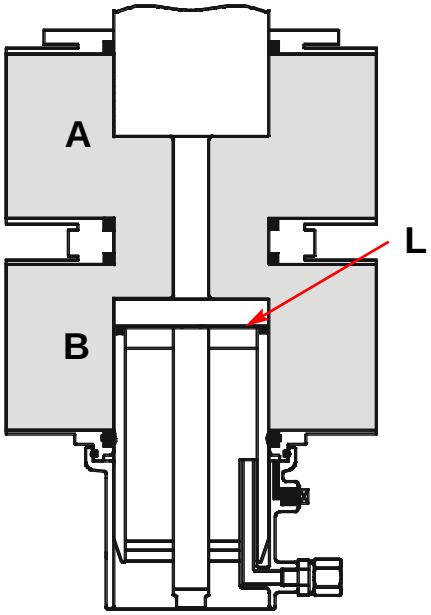

3.2 Valve in "open" position

By control of the actuator, the upper valve shaft is pressed against the seal of the lower valve shaft. Thus, the leakage chamber **L** is closed against the product chamber.
Then the two valve shafts move downwards into the open position. A connection between the two pipelines **A** and **B** is produced.

4. Control Unit

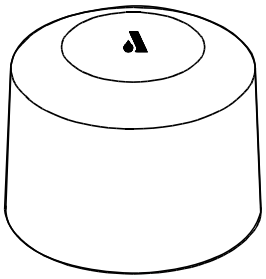

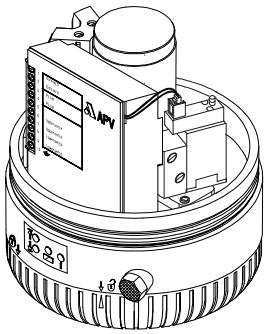

CONTROL UNIT

The following different designs are available:

3 soleniod valves (EMV)	
AS-interface 2.1 ref.No.:	CU33 AS-interface 2.1 Safety Stop SLD 000 08 - 45 - 074/93
Profibus ref.No.:	CU33 DA3+ Profibus 000 08 - 45 - 080/93
	functional description, see separate operating manual of control units
Direct Connect ref.No.:	CU33 Direct connect with 2 Hall sensors 000 16 - 31 - 249/93 + 2 external proximity switches

a**dapter**	
Benennung: ref.No.:	CU33 adapter DA3 08-48-471/93

4.1 Functional description of CU33 Direct Connect Control Unit with 2 Hall sensors + 2 external proximity switches

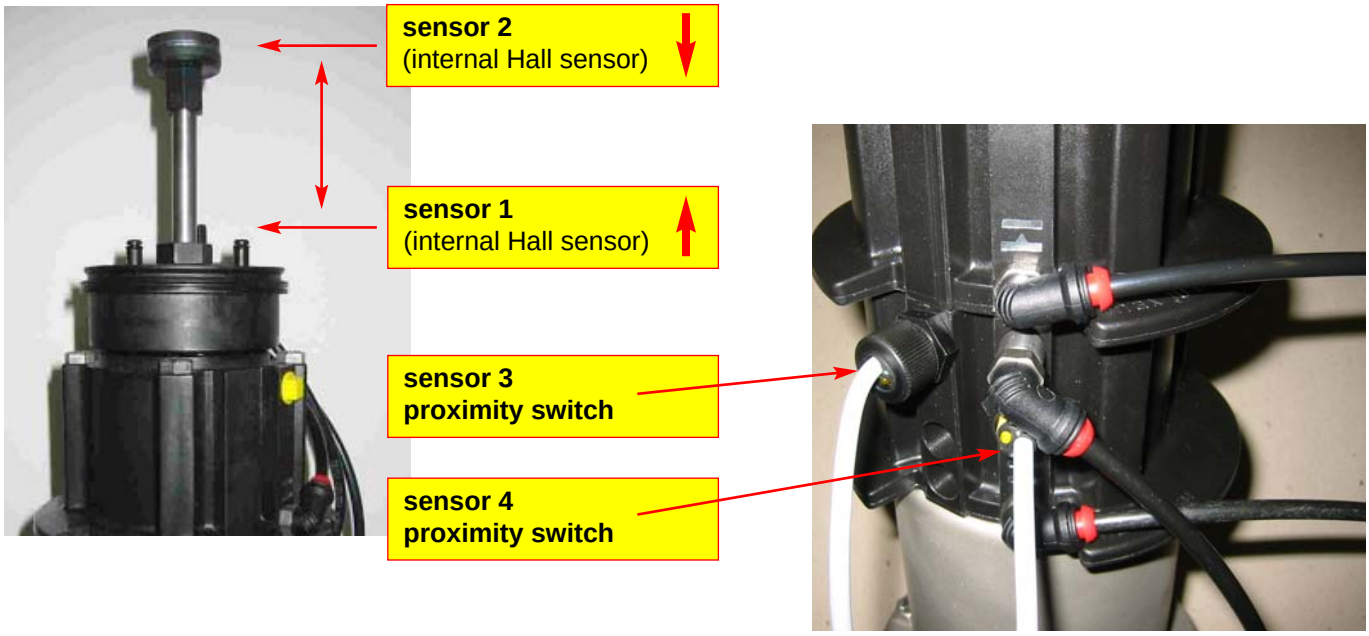

4. Control Unit

4.1 Functional description of CU33 Direct Connect Control Unit with 2 Hall sensors and 2 external proximity switches

feedback sensor	sensor 1 internal Hall sensor	sensor 2 internal Hall sensor	sensor 3 external proximity switch	sensor 4 external proximity switch
valve position				
closed	0	1	1	1
open	1	0	0	0
upper seat lift	0	1	1	0
lower seat lift	0	0	1	1

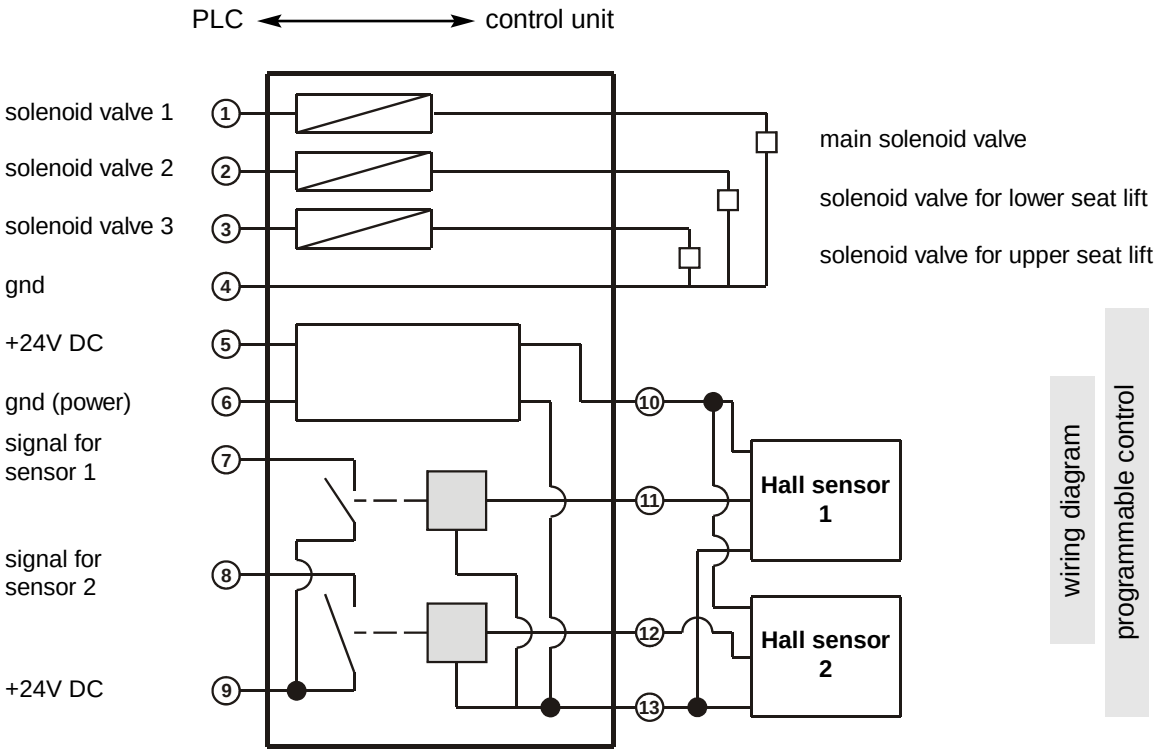

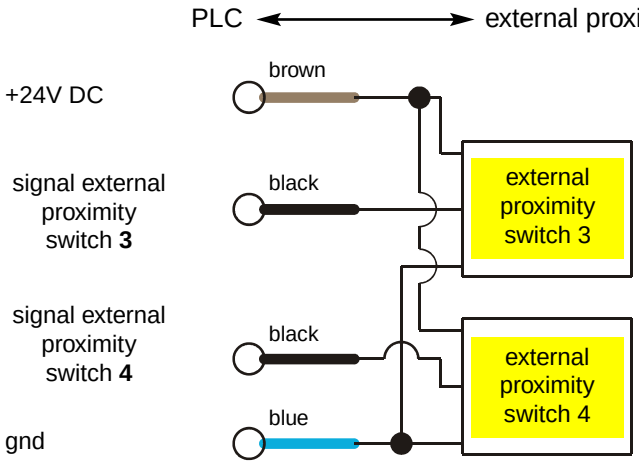

We recommend to use our APV standard types:
three-wire proximity switch
operating distance: 5 mm / diameter: 11 mm
operating voltage: 10 – 30 V DC
pnp – positive switching, closing function
installation "non-flush"

If the customer decides to use a valve position indicator other than APV type, we cannot take over any liability for malfunctions.

5. Cleaning

For cleaning of the DELTA DA3+ valve, one has to distinguish between three areas:

5.1 The flow areas

The upper and lower passages are cleaned by the passing cleaning liquid during cleaning of the connected pipelines.

5.2 The seal surfaces

The seal surfaces of the upper area (upper shaft and seat seal) and the lower area (lower shaft and seat seal) are flushed and cleaned by cleaning liquid during the lifting of the individual valve shafts during cleaning of the respective passage.

5.3 The leakage chamber

The Cleaning of the leakage chamber is undertaken by CIP spraying. CIP cleaning connection **(C)**.
The valve shafts being lifted, the CIP liquid also cleans the leakage chamber.

Spraying does not produce pressure build-up in the leakage chamber and can be carried out in closed and in open valve position. The conduct of the cleaning liquid provides for a biologically perfect cleaning of the whole leakage chamber.

Under normal conditions
15 valves DN 40 - 100 / 1,5” - 4”
10 valves DN 125 - 150 can be cleaned via one spray distribution line DN 25.

fig. 5.3

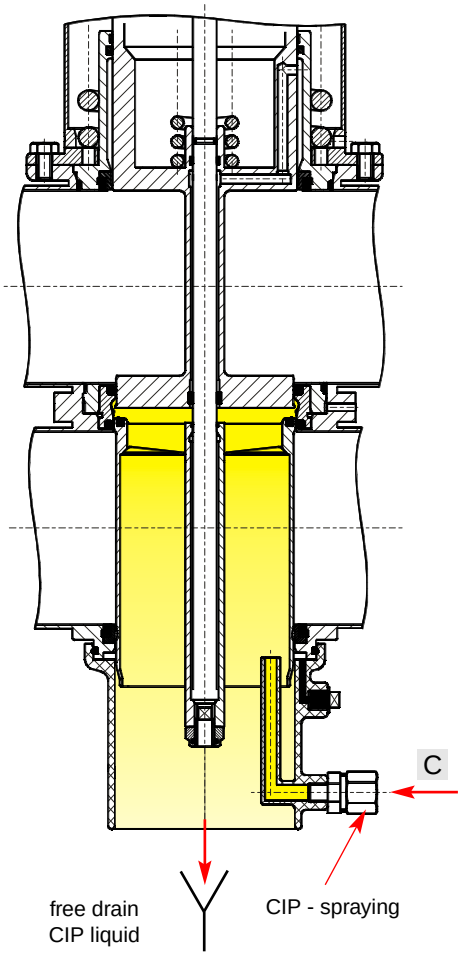

5.4 Cleaning recommendation:

cleaning step	lifting cycle	CIP spraying
pre-flushing	————————	3 x 10 sec.
caustic flushing 80 ^{o}C	3 x 5 sec.	3 x 10 sec.
intermediate flushing	2 x 5 sec.	2 x 10 sec.
acid flushing	3 x 5 sec.	3 x 10 sec.
subsequent flushing	2 x 5 sec.	2 x 10 sec.

- The lifting cycles refer to a cleaning pressure of **p = 2 - 5 bar.**
- Depending on the pressure ratio, cleaning temperatures, cleaning steps and degree of soiling, different cycles must be adjusted.
- Flushing quantities per CIP spraying cycle:
  DN 40 -100 / 1,5” - 4” **ca. 1,2ltr/10s**
  DN 125, 150 **ca. 5ltr/10s**
- Cleaning pressure at CIP cleaning connection: **min. 2 bar.**
  max. 5 bar.

5. Cleaning

5.5 Flushing quantity in ml per lifting cycle / 5 sec.

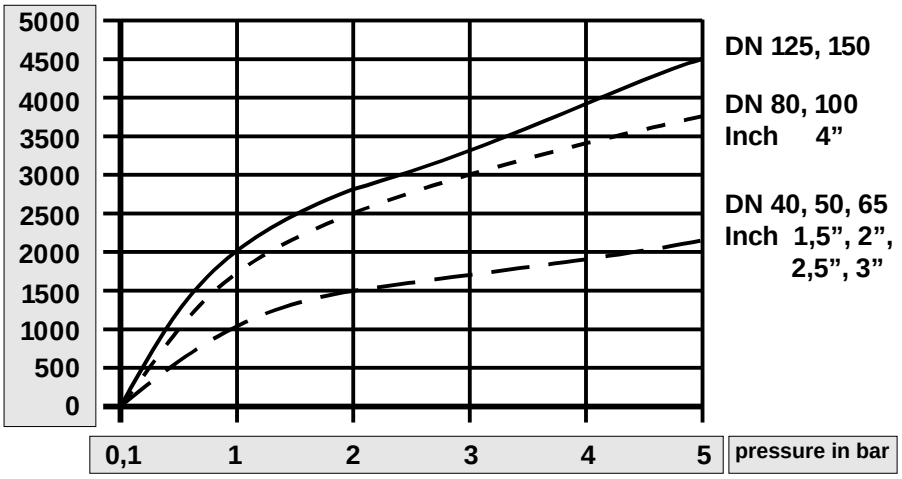

fig. 5.6

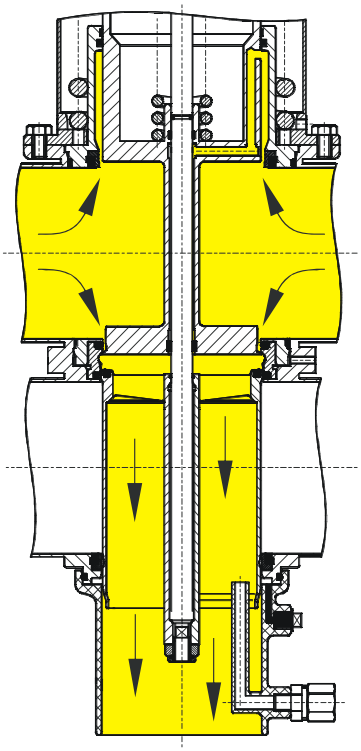

5.6 Cleaning of upper area (fig. 5.6)

The upper valve shaft is lifted via the connection

(A2)

By lifting of the upper valve shaft, the cleaning liquid flushes over the upper seat seal and the upper valve seat into the leakage chamber and cleans this area. The cleaning liquid is drained off to the bottom in depressurized state.

Simultaneously, the upper shaft seal and the outer surface of the upper valve shaft are cleaned. Then the cleaning liquid is drained off at the inner tube of the lower valve shaft to the bottom.

The lifting stroke is limited by a metallic stop.

fig. 5.7

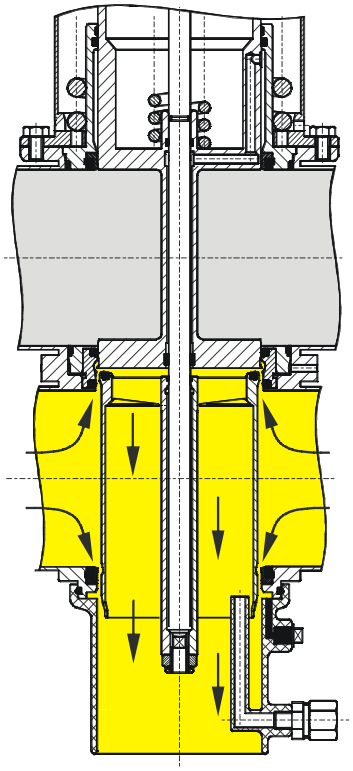

5.7 Cleaning of the lower area (fig. 5.7)

The lower valve shaft is lifted via the connection

(A1)

By lifting of the lower valve shaft, the cleaning liquid flushes over the lower seat seal into the leakage chamber and cleans this area. The cleaning liquid is drained off to the bottom in depressurized state.

Simultaneously, the lower shaft seal and the outer surfaces of the lower valve shaft are cleaned. The cleaning liquid flushes the spray connection and is then drained off to the bottom in depressurized state.

The lifting stroke is limited by a metallic stop.

6. Installation

- The valve must be installed in vertical position. Fluids are, therefore, freely drainable from the valve housing and the leakage chamber.
- Valve housings can be welded direct into the pipelines (completely dismantable valve insert).
- **Attention:** Observe welding instructions.
- Heights of installation and dismantling (see section 7).

6.1 Welding Instructions

DA3+

- Before welding of the valve, the valve insert must be dismantled from the housing. Careful handling to avoid damage to the parts is necessary (see 11.1).
  It is not necessary to remove the lower shaft seal as it can be destroyed during dismantling.
- Welding should only be carried out by certified welders (EN 287-1). (Seam quality EN 25817 "B").
- The welding of the valve housings must be undertaken in such a way that the valve body is not deformed.
- The preparation of the weld seam up to 3 mm thickness must be carried out as a square butt joint without air. (Consider shrinkage!)
- TIG orbital welding is best!
- After welding of the valve housing or of the mating flanges and after work at the pipelines, the corresponding parts of the installation and pipelines must be cleaned from welding residues and soiling before operation of the valves to avoid damage to the valves and seals.
  If these cleaning instructions are not observed, welding residues and dirt particles can settle in the valve and cause damage.
- Any damage resulting from the non-observance of these welding instructions is not subject to our guarantee.

7. Dimensions / Weights

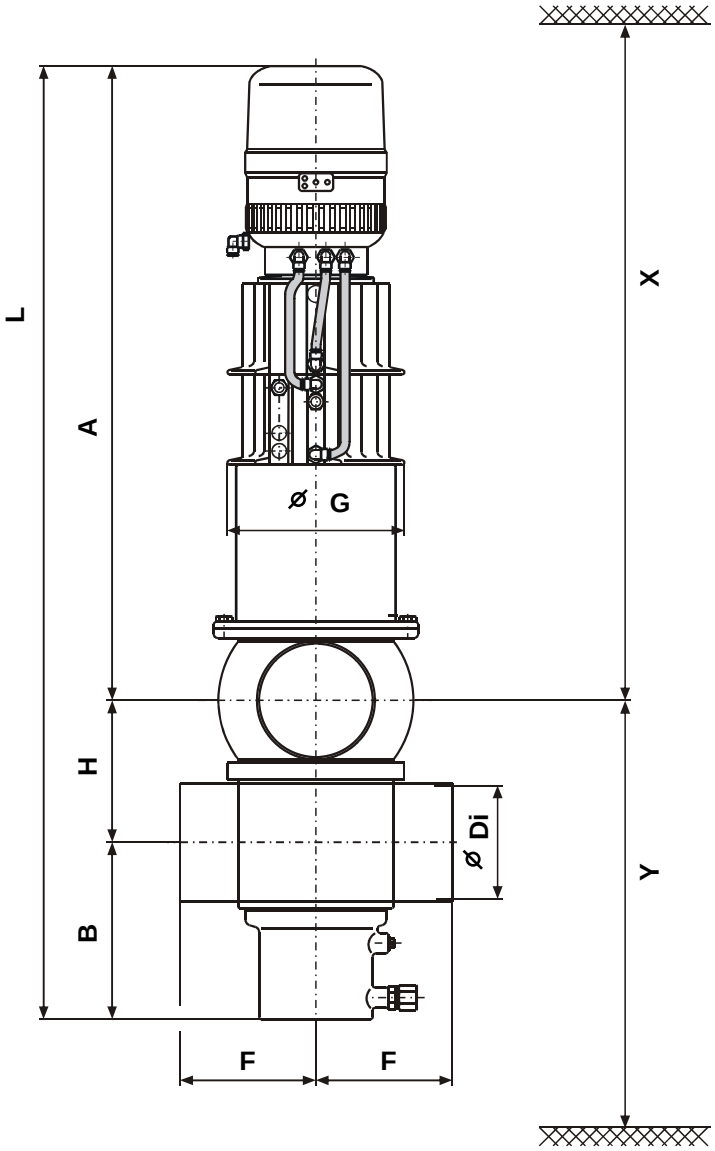

								installation dimensions min. in mm		weight in
DN	**A**	**B**	**Ø Di**	**F**	**Ø G**	**H**	**L**	**X**	**Y**	**Kg**
40	502	120	38	100	163	63	685	784	200	14,2
50	508	126	50	100	163	75	709	804	218	14,3
65	516	134	66	100	163	91	741	824	242	14,5
80	543	146	81	120	188	106	795	914	274	19,7
100	553	156	100	120	188	125	834	944	303	20,8
125	631	176	125	150	236	150	957	1074	342	47,1
150	643	189	150	150	236	175	982	1134	392	48,0
inch										
1,5”	503	119	35,1	100	163	63	685	784	197	14,2
2”	509	125	47,8	100	163	75	709	804	216	14,3
2,5”	513	131	60,0	100	163	85	729	824	233	14,5
3”	519	137	72,1	100	163	97	753	854	251	14,9
4”	554	155	97,6	120	188	125	834	944	301	20,8

8. Technical Data

product-wetted parts :	**1.4571, 1.4404**
other parts :	**1.4301**
seals : **standard design:** options:	 **EPDM/ PTFE** **HNBR/ PTFE** **FPM/ PTFE** **VMQ/ PTFE**
actuator :	**PA 12 GF 30**
spray connection :	**PP**
max. line pressure :	**10 bar**
max. operating temperature :	**135°C EPDM, HNBR** ***VMQ, *FPM**
short-term load :	**140°C EPDM, HNBR** ***VMQ, *FPM** *** (no steam)**
tightening torque for stop sleeve (11) :	**15Nm**
tightening torque for safety nuts (42, 16) at upper and lower valve shaft :	**40Nm**
cleaning connection (for hose) **DN 40 - 100 / inch 1,5” - 4” :** **DN 125 - 150 :**	 **8x1mm** **10x1mm**
air connection (for hose) **:**	**6x1mm**
max. pneumatic air pressure :	**10 bar**
min. pneumatic air pressure :	**6 bar**

(Use dry and clean pneumatic air, only.)

8.1	**air consumption actuator in NL / stroke**	**air consumption seat lift cylinder in NL / stroke**		**closing times in sec.**	
DN / inch	**valve open**	**upper seat lift**	**lower seat lift**	**hose length 1m**	**10m**
40 / 1,5”	0,9	1,1	0,3	1,5	2,5
50 / 2”	1,1	1,3	0,3	1,5	2,5
65 / 2,5”	1,3	1,5	0,3	1,5	2,5
3”	1,3	1,5	0,3	3,0	4,0
80, 100 / 4”	2,3	2,6	0,45	3,0	4,0
125, 150	6,4	7,0	1,1	8,0	8,0

8. Technical Data

8.2	kvs - values in m^3/ h			
	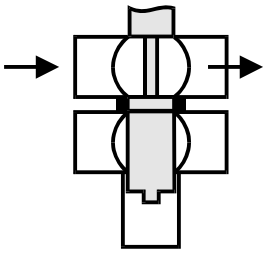	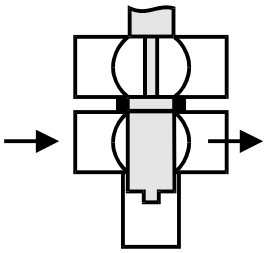	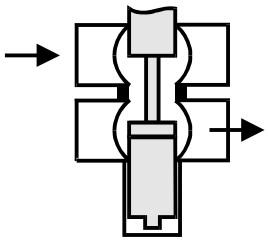	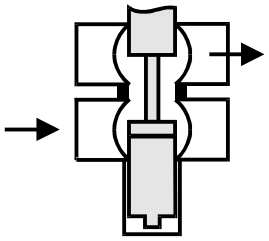
DN				
40	57	46	23	25
50	120	95	42	45
65	219	148	69	78
80	296	200	120	130
100	505	320	164	170
125	**800***	**500***	300	330
150	**1200***	**700***	360	380
inch				
1,5”	47	40	21	24
2”	100	73	43	46
2,5”	170	122	59	66
3”	213	160	71	80
4”	490	294	150	160

*** no measuring value**

8.3 valve stroke

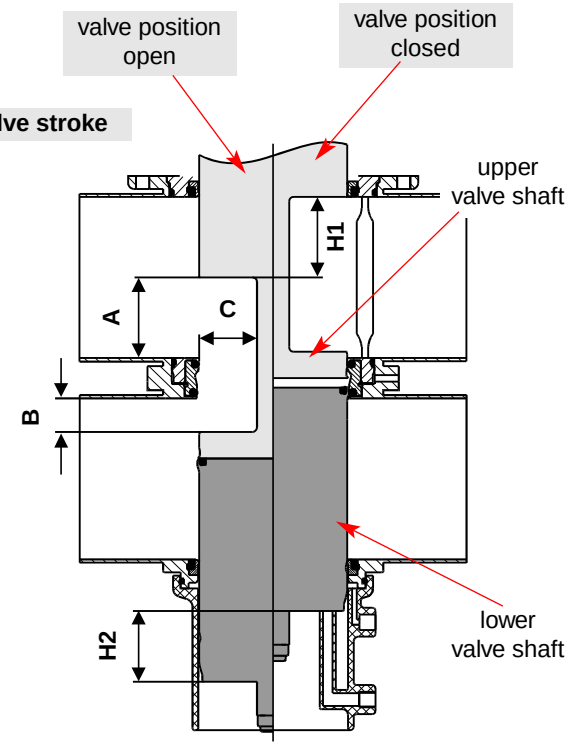

table to fig. 8.3
dimensions in mm

DN	A	B	C	stroke H1 upper shaft	stroke H2 lower shaft
40	6	3	21,2	32	26
50	11	10	21,2	39	33
65	21	16	21,2	45	39
80	31	21	36,2	50	44
100	50	21	36,2	50	44
125	63	33	55,2	62	56
150	88	33	55,2	62	56
inch					
1,5”	6	3	21,2	32	26
2”	11	10	21,2	39	33
2,5”	15	16	21,2	45	39
3”	27	16	21,2	45	39
4”	50	21	36,2	50	44

9. Maintenace

- The maintenance intervals are different depending on the application and must be determined by the operator himself carrying out temporary checks.

- For the dismantling of the valve, compressed air is not required.

- Required tools:
- 1 x hexagen socket wrench 3
- 1 x wrench SW13
- 2 x wrench SW17
- 2 x wrench SW24
- disassembly and assembly tool for the lower shaft seal, ref.-No. 000 51-13-100/17

- Replacement of seals according to Service Instructions.
  The customer is recommended to hold spare seals on stock.
  For valve maintenance APV supplies complete seal kits including seal grease (pl. see spare parts lists).

- The valve must not be cleaned with products containing abrasive or polishing substances. Especially the valve shafts must not be cleaned with such agents under any circumstances. Damage at the valve shaft can produce leakages.

- Assembly of the valve according to service instructions.

- To simplify the installation of the middle seal, assembly tools are available (see item 12.).

- **Provide all seals with a thin layer of grease before their installation (see lubrication chart)**

  Recommendation:
  APV food grade grease for EPDM, HNBR and FPM (Viton)
  (0,75 kg/ tin - ref.-No. 000 70-01-019/93)
  (60 g/ tube - ref.-No. 000 70-01-018/93)

  APV food grade grease for VMQ (Silikon)
  (0,60kg/ tin - ref.-No. 000 70-01-017/93)
  (60 g/ tube - ref.-No. 000 70-01-016/93)

! **No matter what type of application, use only those greases being suited for the respective seal material.**

  Recommendation for actuator:
  APV pneumatic grease:
  (25 ml-tube - ref.-No. 000 70-01-008/93)

10. Service Instructions

The item numbers refer to the spare parts drawings
DIN design : **RN 01.053.76**
Inch design : **RN 01.053.76-1**

10.1 Dismantling from the line system

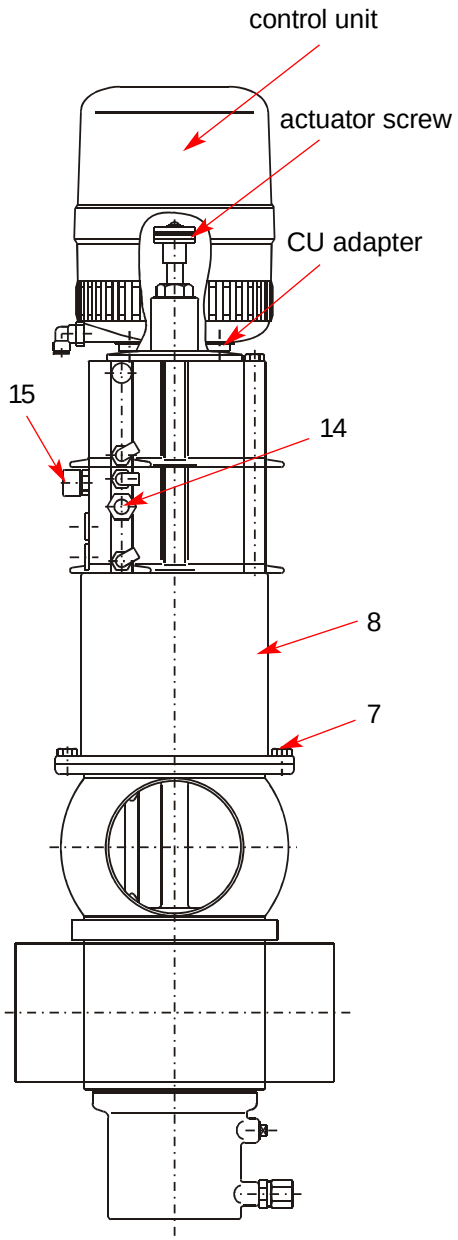

a. Shut off the line pressure in the product and cleaning lines, discharge the pipes if possible.

b. Release the compressed air line from the CU adapter.

c. Release the nut of the proximity switch (15, 14) and pull out the proximity switches.

d. Remove the control unit.
(Turn safety ring in anticlockwise direction, see symbols on the control unit.)

= open = closed

e. Remove the flange screws **(7)** at the spring cylinder **(8)**.

f. Screw in one flange screw into the threaded bore of the spring cylinder to lift the complete valve insert. Do not remove the screw which will help to re-install the valve insert.

g. Carefully lift the valve insert vertically out of the valve housing.

10. Service Instructions

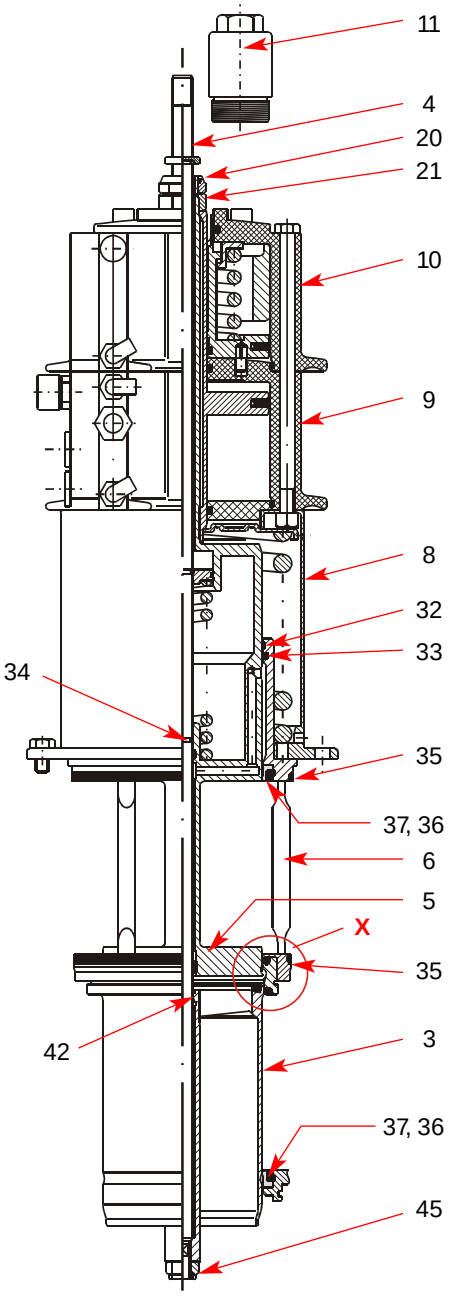

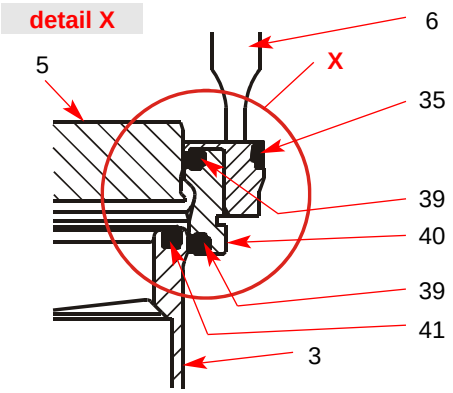

10.2 Dismantling of the product-wetted seals (service)

a. Unscrew the actuator screw from the guide rod.

b. Remove the adapter for the control unit.

c. Remove the lower and upper housing seal (35) from the valve seat (6).

d. Release the lower safety nut **(45)**. Holding the lower shaft **(3)** with a wrench SW17 prevents it from turning.

e. After removal of the nut, detach the lower shaft from the guide rod (4).

Dismantling of middle seal (41)

f. Pierce the middle seal with a peaked object and pull it out of the groove. Take the o-ring **(42)** out of the groove.

g. Unscrew the stop screw **(11).**

h. Lift the guide rod **(4)** out to the top and remove the o-ring **(34)**.

i. Remove the safety nut **(20)**. By holding the safety disc **(21)** with a wrench SW24 it is prevented from turning. Remove the safety disc.

j. Lift off the spring cylinder **(8)** with main cylinder **(9)** and seat lift cylinder **(10)**. (Service of main and seat lift cylinder, see **10.3**).

k. Press the upper valve shaft **(5)** with seat ring **(40)** to the bottom out of the valve seat **(6)**.

l. Slide the seat ring **(40)** over the compensating piston of the upper valve shaft.

m. Remove the seat seals **(39)** from the groove (see detail **X**).

n. Dismantling of upper shaft seal (37, 36)
Take a peaked object to pierce the seat seal **(36)** and pull it out of the valve seat. Afterwards, remove the PTFE seal **(37)**.

o. Dismantling of lower shaft seal (37, 36) from the housing
Take the metal point of the disassembly tool to stick into the seat seal **(36)** from the top and pull it off to the top.
Afterwards, remove the PTFE seal **(37)** to the top through the housing by means of the mandril of the assembly tool.

p. Remove the seal ring **(33)** and guide band **(32)** from the groove of the valve seat **(6)**.

10. Service Instructions

actuator DA3SLD

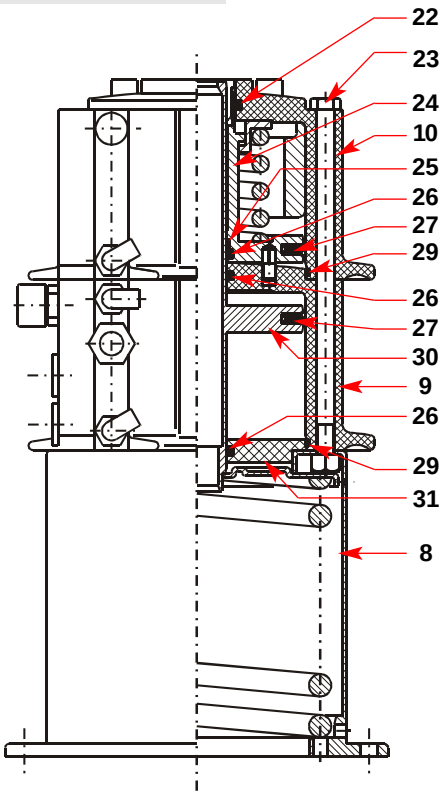

10.3 Actuator (Service)

a. Dismantle actuator (seat lift cylinder **(10)**, main cylinder **(9)** and spring cylinder **(8)** from the valve insert as described in **10.2 a.-h.**

b. Remove the hexagon screws **(23)**.
Lift the seat lift cylinder with the main cylinder from the spring cylinder.

10.3.1 Dismantling of seals and disassembly of the seat lift and main cylinder

a. Lift the seat lift cylinder **(10)** from the main cylinder **(9)**.
Push the piston rod **(24)** out of the seat lift actuator.

b. Remove the piston seal **(27)**, quadrings **(22, 26)**, guide band **(25)** and o-ring **(29)**.

c. Clean the seat lift cylinder and the piston rod.

d. Press the piston of the main cylinder **(30)** with cover **(31)** out of the main cylinder. Slide the cover from the piston.

e. Remove the quadrings **(26)**, o-ring **(29)** and piston seal **(27).**

f. Clean the main cylinder, cover and piston.

10.3.2 Installation of seals and assembly of the seat lift and main cylinder

a. Slightly grease all seals.
Attention: See to all seals and bearing surfaces in the seat lift cylinder and main cylinder being greased sufficiently!!! (s. lubrication chart: RN 260.064-1)

- Use appropriate pneumatic grease.
Recommendation for the actuator (main cylinder):
APV pneumatic grease: (25 ml tube - ref.-No. 000-70-01-008/93)

b. Insert the seals into their corresponding grooves.

c. Insert the piston rod **(24)** in the seat lift actuator.

d. Slide the piston of the main cylinder **(30)** into the main cylinder until it stops.

e. Slide the cover **(31)** over the piston **(26)**. Press the cover into the main cylinder.

f. Place the seat lift cylinder on the main cylinder:
The cylindrical dowel pin **(28)** must engage in the bore of the housing of the main cylinder.

g. Place the main cylinder with the seat lift cylinder on the spring cylinder **(8)**.

h. Insert the hexagon screws **(23)** and tighten them crosswise.

The spring cylinder (8) is preloaded by spring force.
Opening of the spring cylinders is strictly forbidden.
Danger to life!

10. Service Instructions

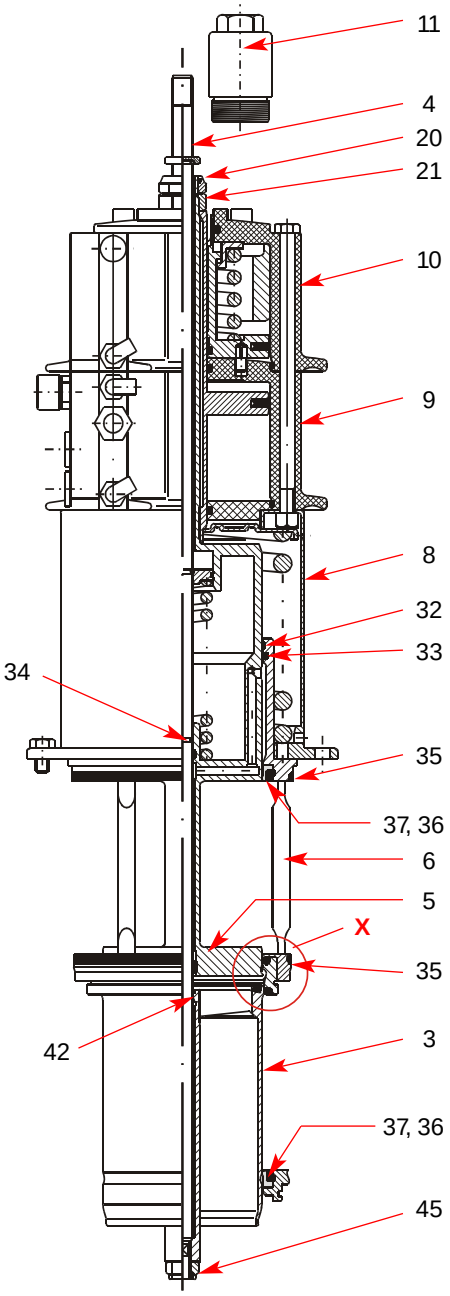

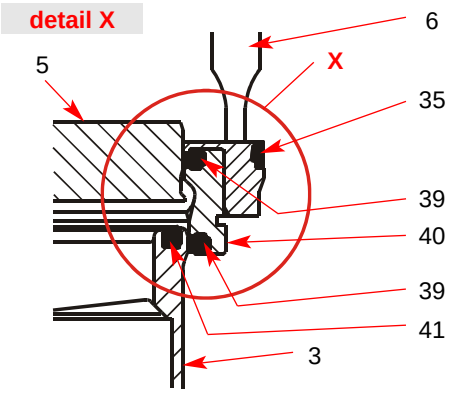

10.4 Installation of product-wetted seals and assembly of the DELTA DA3SLD valve

Attention: See to all seals and bearing surfaces in the product area being slightly greased before their installation **(see lubrication chart: RN 260.064-1).**

a. Install the lower shaft seal **(36, 37)** in the lower housing flange **(see page 19).**

b. Place the quadring **(33)** and the guide band **(32)** in the valve seat **(6)**.

c. Install the upper shaft seal **(37, 36)** in the valve seat. Insert the PTFE ring **(37)**, at first. Then press the elastomer ring **(36)**, the wide side to the front, into the groove between PTFE seal and valve seat.

d. Install the upper and lower housing seals **(35)**.

e. Press the upper and lower seat seal **(39)** into the seat ring **(40)**.
Attention: **The seal shoulder must fit properly into the groove (see detail X).**

f. Slide the seat ring **(40)** from the top over the compensating piston of the upper valve shaft **(5)**.

g. Slide the valve seat **(6)** over the compensating piston of the upper valve shaft **(5)** in the same way.

h. Insert the upper valve shaft **(5)** with seat ring **(40)** and valve seat **(6)** through the actuator until it stops.

i. Fasten the valve shaft with safety disc **(21)** and safety nut **(20)**. Holding the safety disc with a wrench SW24 prevents the safety nut from turning.
Tightenting torque: Md = 40 Nm

j. Insert the middle seal **(41)** into the lower shaft **(3)** by means of the assembly tool (see page 19).
Assembly without assembly tool:
Press the slightly greased seal at four spots into the groove. Then press the four loops in by means of an even object. Vent the seal groove at this occasion.

k. Insert the o-ring **(42)** in the lower valve shaft.

l. Install the o-ring **(34)** on the guide rod **(4)**.

m. Slide in the guide rod from the top through the actuator until it stops.

n. Slide the lower valve shaft on the guide rod and fasten it with the safety nut **(45)**.
Tightening torque: **Md = 40 Nm**
Attention: **Check the position of the lower seat seal (36) (see detail X).**

o. Screw in the stop screw **(11)** until it stops.
Tightening torque: Md = 15 Nm

p. Fasten the adapter for the control unit. Tighten the actuator screw on the guide rod until it stops.

10. Service Instructions

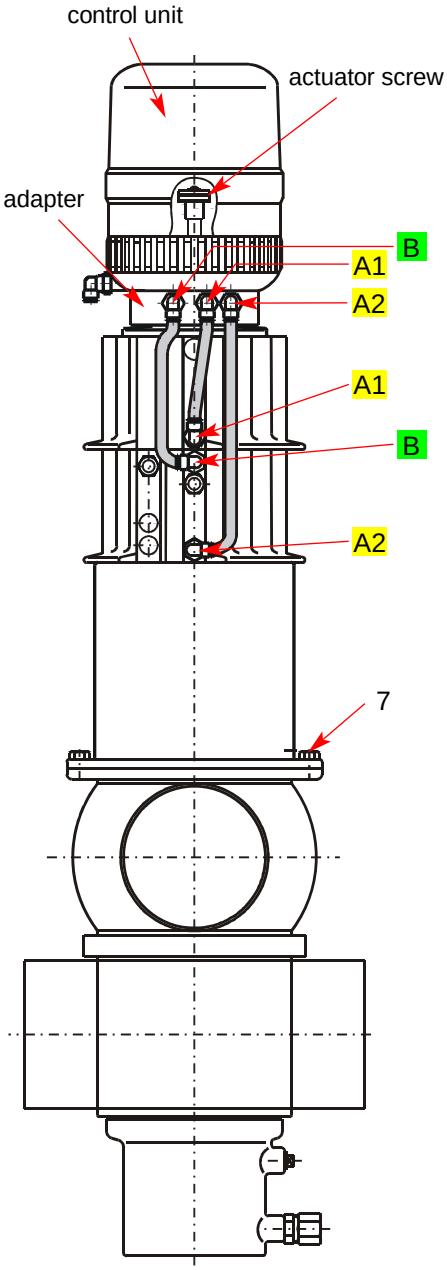

10.5 Installation of the valve insert

a. Carefully place the valve insert in the valve housing until the screw stops **(see 10.1.f.)**.

b. Remove the stop screw and carefully press the valve insert into the housing.

c. Enter screws **(7)** and tighten them crosswise.

10.6 Installation of Control Unit

a. Fasten the control unit.
(Turn the safety ring in clockwise direction, see symbol on the control unit.)

 = open

 = closed

b. Install the compressed air lines.

air connection A1	:	lifting of lower shaft
air connection B	:	valve open
air connection A2	:	lifting of upper shaft

c. Installation of valve position indication.
Release nut and push the proximitiy switches into the sleeve until they stop.

d. Fix the proximity switches by the nut.

e. Check the valve position indications.

11. Disassembly and Assembly Tool

11.1 Assembly of the lower shaft seal pos. 37, 36

seal 37, 36

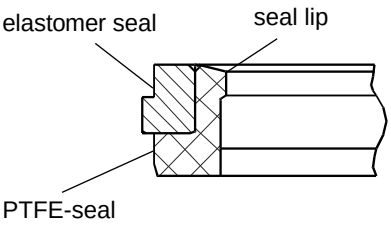

assembly tool

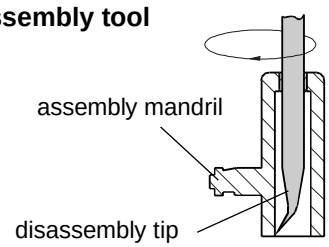

For a simple disassembly and assembly of the lower shaft seal a universal tool **(ref.-No. 000 51-13-100/17)** can be used.
The use of this tool is especially recommended for valves of the small series (DN 40-65/inch 1,5”-3”), as access to the lower shaft seal from the top is impossible as a result of the narrow seat.

Attention:
Do not damage the seal lip of the PTFE seal during assembly.
To avoid injuries the disassembly tip must be covered by the assembly mandril if not used.

1) Assembly of the PTFE seal (fig. 1,2)

a) Press the PTFE ring into an oval shape.
b) Introduce the PTFE ring from the top by means of the assembly tool, the wide side to the front, through the intermediate ring of the housing into the lower housing **(fig. 1)**.
c) Pull the PTFE ring into a round shape by means of the assembly mandril **(fig. 2/I)** and press it into the groove - **do not knock or beat (fig. 2/II).**

1)

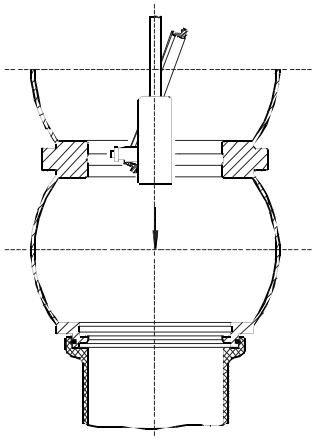

2) Assembly of the elastomer seal (fig. 1,3,4)

a) Slightly grease the seal.
b) Insert the elastomer from the top by means of the assembly tool, the wide side to the front, through the intermediate ring of the housing into the lower housing **(fig. 1)**.
c) Fix the seal by means of the groove of the assembly mandril **(fig. 3/I)**.
d) Press in the elastomer at one spot between the housing flange and the PTFE **(fig. 3/II)**.
e) By sliding the assembly mandril around the seal, the seal is inserted completely into the groove **(fig. 4)**. See to an even fit of the elastomer seal in the groove.

2)

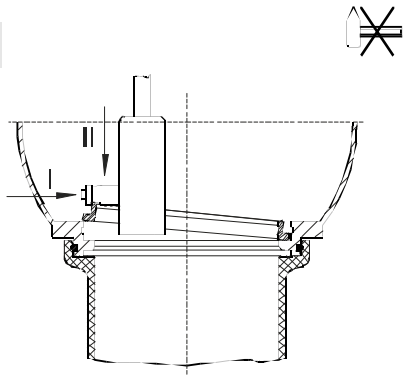

3)

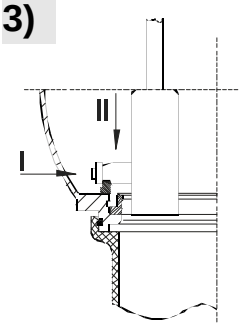

4)

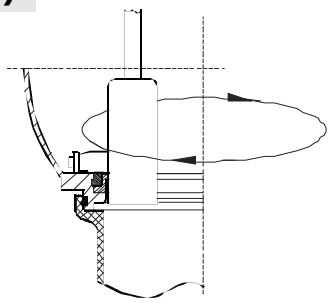

12. Assembly tool for the middle seal

fig. 12.1

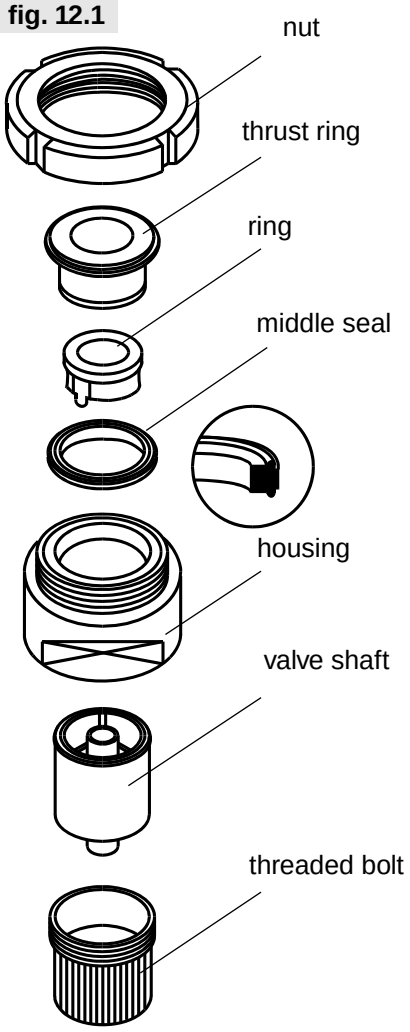

The assembly tool consists of:

- nut
- thrust ring
- ring with vent nose
- housing
- threaded bolt

Installation of the middle seal in the valve shaft (fig. 12.1)

1. Insert the valve shaft into the housing in such a way that the seal groove is in the housing.
2. Clamp the shaft into the housing by means of the threaded bolt. Clamp the housing into a vice.
3. Slightly grease the middle seal with APV food-grade grease. Then install the seal on the ring.
4. Introduce the ring with the installed seat seal into the housing. The vent nose is positioned in the seal groove.
5. Insert the thrust ring around the ring in the housing. Screw on the nut and tighten it with a hook spanner until it stops.
6. Release the nut. Take ring and thrust ring off the housing.
7. Take housing out of the vice, take off the threaded bolt. Detach the valve shaft from the housing.

Check the even fit of the middle seal.

fig. 12.2

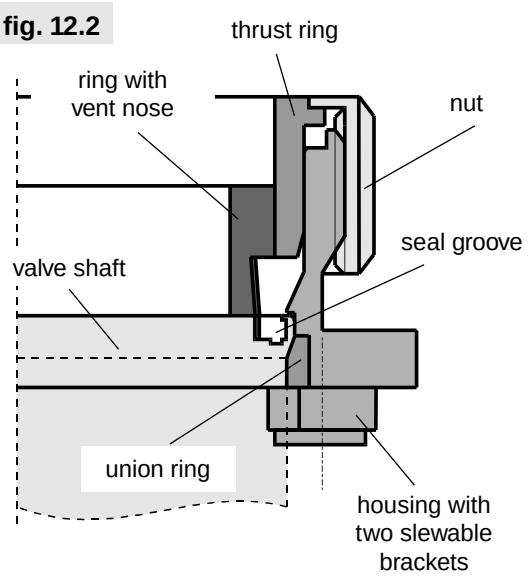

Assembly tool for middle seal (fig. 12.1)			
DN	**inch**	**designation**	**ref.-No.:**
40 50 65	**1,5” 2” 2,5” 3”**	**DA3 - 62**	**51 - 13 - 210/17**
80 100	**4”**	**DA3 - 92**	**51 - 13 - 211/17**
125* 150*		**D3 - 138**	**51 - 13 - 676/17**

* **For the valves of the series DN125, 150 the assembly tool in the old design must be used. See fig. 12.2.**

13. Trouble Shooting

Failure	***Remedy***
Leakage at the upper housing flange.	**replace upper housing seal (35).**
Leakage from the leakage bore between the connecting ports.	**replace lower housing seal (35) and seat seals (39).**
Leakage from the bore of the spring cylinder **(8)**.	**replace upper shaft seal (36, 37) and seals in flushing chamber (33, 32).**
Liquids leaking from the drain pipe.	**To be able to make a detailed diagnosis, remove the drain pipe (1).**
Valve closed and pressure in the upper housing	
Leakage at the inner side of the lower valve shaft **(3)**.	**replace upper seat seal (39).**
Leakage at the inner tube of the lower valve shaft **(3)**.	**replace upper shaft seal (37, 36).**
Valve closed and pressure in the lower housing	
Leakage at the inner side of the lower valve shaft **(3)**.	**replace lower seat seal (39).**
Leakage at the outer side of the lower valve shaft **(3)**.	**replace lower shaft seal (37, 36).**
Valve position open	
Leakage at the inner side of the lower valve shaft **(3).**	**replace middle seal (41).**

! ***When damaged seals are changed, generally all seals should be replaced. For valve service actions APV supplies complete seal kits (see spare parts lists).***

14. Spare parts Lists and Lubrication Chart

The reference numbers of the spare parts for the different valve designs and sizes are included in the attached spare parts drawings with corresponding lists.

Please indicate the following data to place an order for spare parts:

- number of required parts
- reference number
- designation.

Data are subject to change.

BA DA3SLD 0002
ID-No.: H 3 2 1 8 3 2

UK

Translation of original manual

rev. 0

WHERE IDEAS MEET INDUSTRY

Your local contact:

APV
Zechenstraße 49
D-59425 Unna

Phone: +49(0) 23 03/ 108-0 Fax: +49(0) 23 03 / 108-210

For more information about our worldwide locations, approvals, certifications, and local representatives, please visit www.apv.com.

02/94

Ersatzteilliste: spare parts list:

Doppelsitzventil DA3SLD seat lift detection
Double seat valve DA3SLD seat lift detection
DN 40-150

Besteht aus 4 Blatt Blatt 1

	Datum	Name
Gezeichnet	28.09.06	Trytko
Geprüft	28.09.06	Splethoff
Normgepr.		

Datum	09/06
Name	Trytko

APV Rosista GmbH
D-59425 Unna
Germany

RN 01.053.76

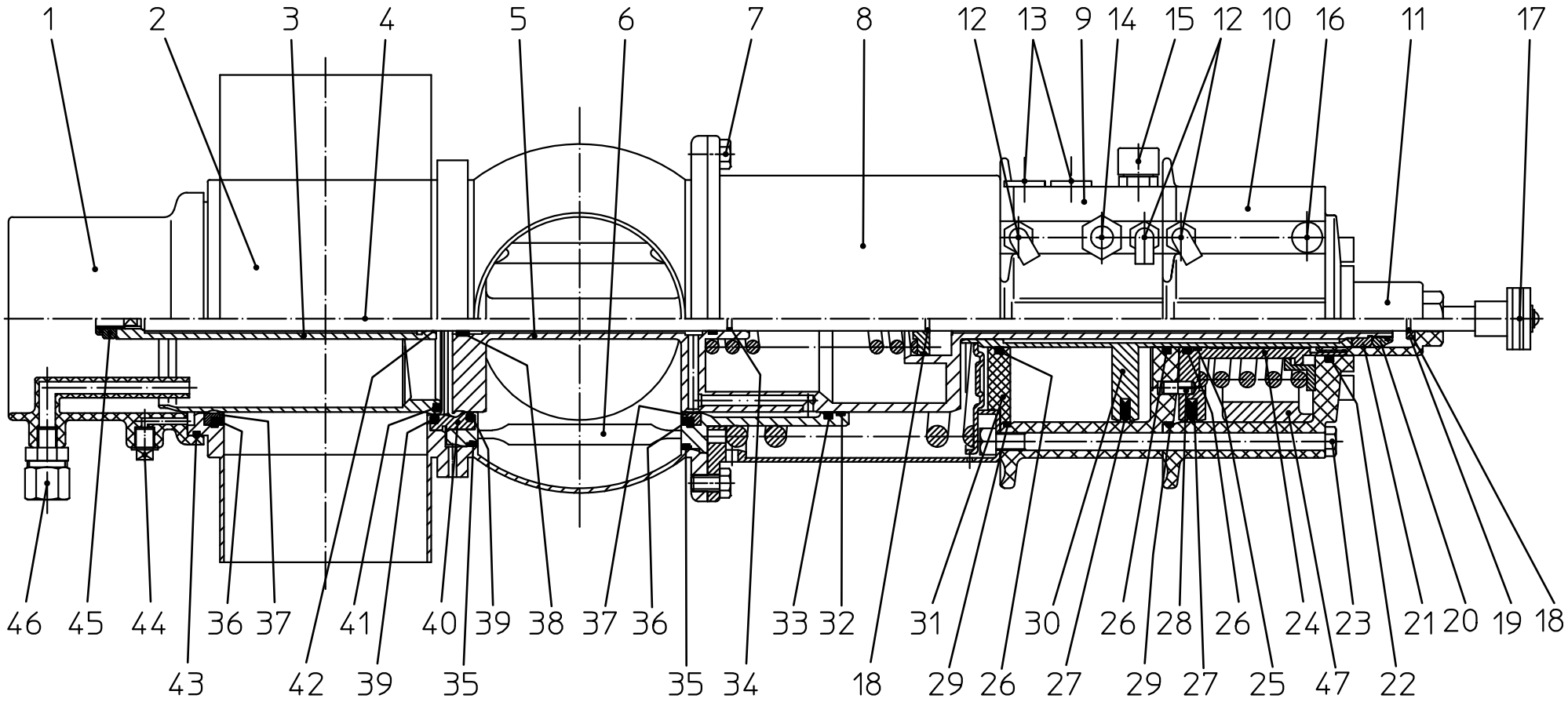

Es stehen verschiedene Dichtungswerkstoffe zur Verfügung. Bitte WS-Nr. ergänzen

The following seal materials are available (fill in last two digits of ref.-no.)

* Dichtungswerkstoff:
material seals:
../13-VMQ
../33-HNBR
../73-FPM
../93-EPDM

** Werkstoff metallisch+Dichtung:
material metallic+seal:
../29-HNBR 1.4404
../59-EPDM 1.4404
../61-VMQ 1.4404
../69-FPM 1.4404

Gehäusedichtung /housing seal
Bei VMQ wird die HNBR-Gehäusedichtung eingesetzt.
For VMQ take the HNBR-housing seal.

Ersatzteilliste: spare parts list:

Doppelsitzventil DA3SLD seat lift detection
Double seat valve DA3SLD seat lift detection
DN 40-150

Blatt 2

	Datum	Name
Gezeichnet	28.09.06	Trytko
Geprüft	28.09.06	Spliethoff
Normgepr.		

Datum	09/06								
Name	Trytko								

APV Rosista GmbH
D-59425 Unna
Germany

RN 01.053.76

Pos. item	Menge quantity	Benennung description	DN 25 WS-Nr. ref.-no.	40 WS-Nr. ref.-no.	50 WS-Nr. ref.-no.	65 WS-Nr. ref.-no.	80 WS-Nr. ref.-no.	100 WS-Nr. ref.-no.	125 WS-Nr. ref.-no.	150 WS-Nr. ref.-no.
1	1	Spritzanschluß Cip connection		09-40-114/93	=	=	09-40-115/93	=		
2	1	Gehäuse DA31 1+2S Housing		16-61-382/47	16-61-432/47	16-61-482/47	16-61-532/47	16-61-632/47		
	1	Gehäuse DA32 1+2+3S Housing		16-62-382/47	16-62-432/47	16-62-482/47	16-62-532/47	16-62-632/47		
	1	Gehäuse DA33 1+2+3S Housing		16-63-382/47	16-63-432/47	16-63-482/47	16-63-532/47	16-63-632/47		
	1	Gehäuse DA34 1+2+3+4S Housing		16-64-382/47	16-64-432/47	16-64-482/47	16-64-532/47	16-64-632/47		
3	1	Schaft unten Lower valve shaft		16-22-393/42	16-22-443/42	16-22-493/42	16-22-543/42	16-22-668/42		
4	1	Zugstange Guide rod		16-23-261/42	16-23-262/42	16-23-264/42	16-23-265/42	16-23-266/42		
5	1	Schaft oben Upper valve shaft		16-22-210/42	16-22-211/42	16-22-213/42	16-22-215/42	16-22-216/42		
6	1	Ventilsitz mit Spülkammer Valve seat with rinse chamber		16-37-394/43	16-37-444/43	16-37-494/43	16-37-544/43	16-37-644/43		
7	4	Skt. Schraube Hex. screw		DIN EN 24017-M8x14-A2-70						
8	1	Federzylinder Spring actuator		16-30-094/17	=	=	16-30-095/17	=		
9	1	Hauptzylinder Main actuator		15-31-243/93	=	=	15-31-244/93	=		
10	1	Anlüftzylinder Seat lifting device		16-30-225/93	=	=	16-30-226/93	=		
11	1	Anschlagschraube stop sleeve		16-28-266/93	=	=	=	=		
12	3	Verschraubung G1/8 6x1 Union		08-60-750/93	=	=	=	=		
13	2	Verschlußkappe 11,1x5 Cap		08-05-066/93	=	=				
14	1	Initiatorhalterung IHP ø11 SLD Mounting block IHP ø11 SLD		15-33-939/93	=	=	=	=		
15	1	Initiatorhalterung ø11 D3 Mounting block ø11 D3		15-33-918/93	=	=	=	=		
16	1	Entlüftungsstopfen G1/8 Venting plug		08-60-005/93	=	=	=	=		
17	1	CU Magnetschaltnocke SW4 CU solenoid operating cam SW4		08-60-700/93	=	=	=	=		

Ersatzteilliste: spare parts list:

Doppelsitzventil DA3SLD seat lift detection
Double seat valve DA3SLD seat lift detection
DN 40-150

Blatt 3

	Datum	Name
Gezeichnet	28.09.06	Trytko
Geprüft	28.09.06	Splethoff
Normgepr.		

Datum	09/06								
Name	Trytko								

APV Rosista GmbH
D-59425 Unna
Germany

RN 01.053.76

Pos. item	Menge quantity	Benennung description	DN 25 WS-Nr. ref.-no.	40 WS-Nr. ref.-no.	50 WS-Nr. ref.-no.	65 WS-Nr. ref.-no.	80 WS-Nr. ref.-no.	100 WS-Nr. ref.-no.	125 WS-Nr. ref.-no.	150 WS-Nr. ref.-no.
18	2	Sprengring Retainer ring		08-39-083/13	=	=	=	=		
19	1	Druckstück Thrust ring		08-48-106/12	=	=	=	=		
20	1	Sicherungsmutter Stop nut		65-50-137/15	=	=	=	=		
21	1	Sicherungsscheibe Lock washer		67-03-001/15	=	=	=	=		
22	1	Quadring Quadring Q4221-N7004		58-01-237/83	=	=	=	=		
23	4	Skt. Schraube Hex. screw DIN 933		M8x156 65-01-114/15	=	=	M8x168 65-01-115/15	=		
24	1	Kolbenstange AZyl. kpl Piston shaft for seat lifting device		16-29-065/17	=	=	16-29-066/17	=		
25	1	Führungsband PTFE driving band		08-39-187/93	=	=	=	=		
26	3	Quadring Quadring Q4216-N7004		58-01-236/83	=	=	=	=		
27	2	K-Dichtung Piston seal		PKK-82 58-01-760/83	=	=	PKK-102 58-01-761/83	=		
28	1	Zyl.Kerbstift Cyl.pin 6x14,8		67-15-055/12	=	=	=	=		
29	2	O-Ring O-ring		OR 82,22x2,62 NBR 70-75 Shore A			OR 101,27x2,62 NBR 70-75 Shore A			
30	1	Kolben HZyl. Piston for main actuator		16-29-070/12	=	=	16-29-071/12	=		
31	1	Deckel HZyl. Cover for main actuator		16-00-209/93	16-00-208/93	16-00-207/93	16-00-210/93	=		
32	1	Führungsband PTFE driving band		08-39-198/93	=	=	08-39-188/93	=		
33	1	Quadring Quadring Q4230-E7509		58-01-329/63	=	=	58-01-238/63	=		
34	1	O-Ring O-ring OR-9,25x1,78		58-06-029/64	=	=	=	=		
35	2	Gehäusedichtung * Housing seal		58-33-542/	=	=	58-33-642/	=		
36	2	Tellerdichtung * Seat seal		58-33-493/	=	=	58-33-643/	=		
37	2	Schaftdichtung Shaft seal		58-33-016/23	=	=	58-33-017/23	=		

Ersatzteilliste: spare parts list:

Doppelsitzventil DA3SLD seat lift detection
Double seat valve DA3SLD seat lift detection
DN 40-150

Blatt 4

	Datum	Name
Gezeichnet	28.09.06	Trytko
Geprüft	28.09.06	Splieth off
Normgepr.		

Datum	09/06								
Name	Trytko								

APV Rosista GmbH
D-59425 Unna
Germany

RN 01.053.76

Pos. item	Menge quantity	Benennung description	DN 25 WS-Nr. ref.-no.	40 WS-Nr. ref.-no.	50 WS-Nr. ref.-no.	65 WS-Nr. ref.-no.	80 WS-Nr. ref.-no.	100 WS-Nr. ref.-no.	125 WS-Nr. ref.-no.	150 WS-Nr. ref.-no.
38	1	Führungsring Quide ring		08-39-080/93	=	=	=	=		
39	2	Sitzdichtung * Seat seal		58-33-044/	=	=	58-33-045/	=		
40	1	Sitzring Seat ring		16-00-190/42	=	=	16-00-191/42	=		
41	1	Mitteldichtung * Seal		58-33-047/	=	=	58-33-048/	=		
42	1	O-Ring 12x1 O-ring		58-06-040/63	=	=	=	=		
43	1	O-Ring O-ring		69x3 58-06-295/63	=	=	100x3 58-06-490/63	=		
44	1	Verschluß-Stopfen Locking plug		08-74-014/93	=	=	=	=		
45	1	Sicherungsmutter M10x1 Self-locking nut		65-50-087/15	=	=	=	=		
46	1	G-Verschraubung Straight union		08-63-003/13	=	=	=	=		
47	1	Anschlagring Stop ring								
	1	Ventileinsatz ** Valve insert		16-36-250/	16-36-251/	16-36-253/	16-36-255/	16-36-256/		
		Dichtungssatz / seal kit Pos. 32, 33, 34, 35, 36, 37, 39, 41, 42 nur im kompletten Dichtungssatz erhältlich item. 32, 33, 34, 35, 36, 37, 39, 41, 42 available as complete seal kits only								
	1	Dichtungssatz FPM Seal kit		58-34-686/00	=	=	58-34-689/00	=		
	1	Dichtungssatz EPDM Seal kit		58-34-686/01	=	=	58-34-689/01	=		
	1	Dichtungssatz VMQ Seal kit		58-34-686/02	=	=	58-34-689/02	=		
	1	Dichtungssatz HNBR Seal kit		58-34-686/06	=	=	58-34-689/06	=		

Ersatzteilliste: spare parts list:

Doppelsitzventil DA3SLD seat lift detection
Double seat valve DA3SLD seat lift detection
1,5-4 zoll / inch

Besteht aus 4 Blatt Blatt 1

	Datum	Name
Gezeichnet	28.09.06	Trytko
Geprüft	28.09.06	Splethoff
Normgepr.		

Datum	09/06
Name	Trytko

APV Rosista GmbH
D-59425 Unna
Germany

RN 01.053.76-1

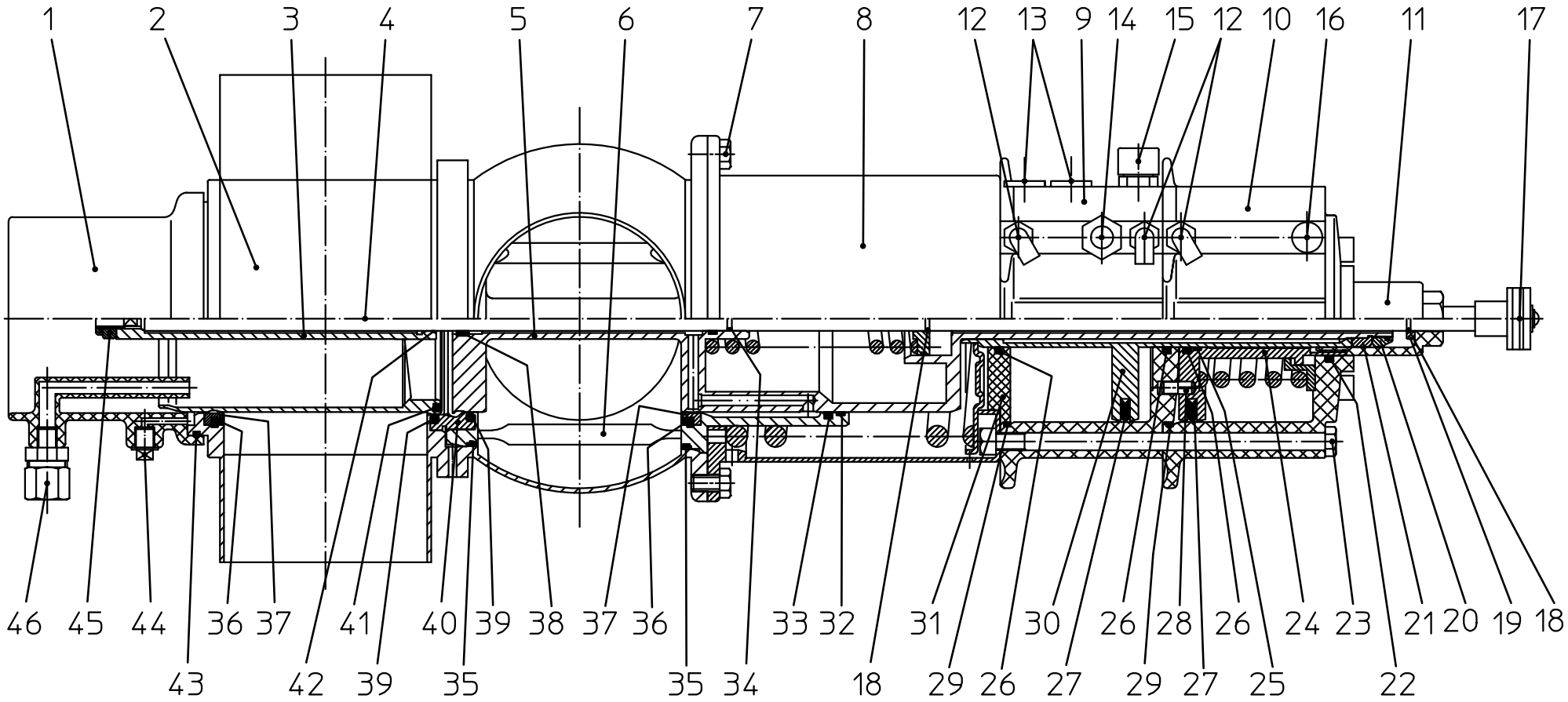

Es stehen verschiedene Dichtungswerkstoffe zur Verfügung. Bitte WS-Nr. ergänzen

The following seal materials are available (fill in last two digits of ref.-no.)

* Dichtungswerkstoff:
material seals:
../13-VMQ
../33-HNBR
../73-FPM
../93-EPDM

** Werkstoff metallisch+Dichtung:
material metallic+seal:
../29-HNBR 1.4404
../59-EPDM 1.4404
../61-VMQ 1.4404
../69-FPM 1.4404

Gehäusedichtung /housing seal
Bei VMQ wird die HNBR-Gehäusedichtung eingesetzt.
For VMQ take the HNBR-housing seal.

Ersatzteilliste: spare parts list:

Doppelsitzventil DA3SLD seat lift detection
Double seat valve DA3SLD seat lift detection
1,5-4 zoll / inch

Blatt 2

	Datum	Name
Gezeichnet	28.09.06	Trytko
Geprüft	28.09.06	Splethoff
Normgepr.		

Datum	09/06								
Name	Trytko								

APV Rosista GmbH
D-59425 Unna
Germany

RN 01.053.76-1

Pos. item	Menge quantity	Benennung description	1" WS-Nr. ref.-no.	1,5" WS-Nr. ref.-no.	2" WS-Nr. ref.-no.	2,5" WS-Nr. ref.-no.	3" WS-Nr. ref.-no.	4" WS-Nr. ref.-no.	WS-Nr. ref.-no.	WS-Nr. ref.-no.
1	1	Spritzanschluß Cip connection		09-40-114/93	=	=	=	09-40-115/93		
2	1	Gehäuse DA31 1+2S Housing		16-61-407/47	16-61-457/47	16-61-507/47	16-61-557/47	16-61-657/47		
	1	Gehäuse DA32 1+2+3S Housing		16-62-407/47	16-62-457/47	16-62-507/47	16-62-557/47	16-62-657/47		
	1	Gehäuse DA33 1+2+3S Housing		16-63-407/47	16-63-457/47	16-63-507/47	16-63-557/47	16-63-657/47		
	1	Gehäuse DA34 1+2+3+4S Housing		16-64-407/47	16-64-457/47	16-64-507/47	16-64-557/47	16-64-657/47		
3	1	Schaft unten Lower valve shaft		16-22-393/42	16-22-443/42	16-22-518/42	16-22-568/42	16-22-668/42		
4	1	Zugstange Guide rod		16-23-261/42	16-23-262/42	16-23-263/42	16-23-267/42	16-23-266/42		
5	1	Schaft oben Upper valve shaft		16-22-210/42	16-22-211/42	16-22-212/42	16-22-214/42	16-22-216/42		
6	1	Ventilsitz mit Spülkammer Valve seat with rinse chamber		16-37-394/43	16-37-444/43	16-37-519/43	16-37-569/43	16-37-644/43		
7	4	Skt. Schraube Hex. screw		DIN EN 24017-M8x14-A2-70						
8	1	Federzylinder Spring actuator		16-30-094/17	=	=	=	16-30-095/17		
9	1	Hauptzylinder Main actuator		15-31-243/93	=	=	=	15-31-244/93		
10	1	Anlüftzylinder Seat lifting device		16-30-225/93	=	=	=	16-30-226/93		
11	1	Anschlagschraube stop sleeve		16-28-266/93	=	=	=	=		
12	3	Verschraubung G1/8 6x1 Union		08-60-750/93	=	=	=	=		
13	2	Verschlußkappe 11,1x5 Cap		08-05-066/93	=	=				
14	1	Initiatorhalterung IHP ø11 SLD Mounting block IHP ø11 SLD		15-33-939/93	=	=	=	=		
15	1	Initiatorhalterung ø11 D3 Mounting block ø11 D3		15-33-918/93	=	=	=	=		
16	1	Entlüftungsstopfen G1/8 Venting plug		08-60-005/93	=	=	=	=		
17	1	CU Magnetschaltnocke SW4 CU solenoid operating cam SW4		08-60-700/93	=	=	=	=		

Ersatzteilliste: spare parts list:

Doppelsitzventil DA3SLD seat lift detection
Double seat valve DA3SLD seat lift detection
1,5-4 zoll / inch

Blatt 3

	Datum	Name
Gezeichnet	29.09.06	Trytko
Geprüft	29.09.06	Splieth off
Normgepr.		

Datum	09/06
Name	Trytko

APV Rosista GmbH
D-59425 Unna
Germany

RN 01.053.76-1

Pos. item	Menge quantity	Benennung description	1" WS-Nr. ref.-no.	1,5" WS-Nr. ref.-no.	2" WS-Nr. ref.-no.	2,5" WS-Nr. ref.-no.	3" WS-Nr. ref.-no.	4" WS-Nr. ref.-no.	WS-Nr. ref.-no.	WS-Nr. ref.-no.
18	2	Sprengring Retainer ring		08-39-083/13	=	=	=	=		
19	1	Druckstück Thrust ring		08-48-106/12	=	=	=	=		
20	1	Sicherungsmutter Stop nut		65-50-137/15	=	=	=	=		
21	1	Sicherungsscheibe Lock washer		67-03-001/15	=	=	=	=		
22	1	Quadring Quadring Q4221-N7004		58-01-237/83	=	=	=	=		
23	4	Skt. Schraube Hex. screw DIN 933		M8x156 65-01-114/15	=	=	=	M8x168 65-01-115/15		
24	1	Kolbenstange AZyl. kpl Piston shaft for seat lifting device		16-29-065/17	=	=	=	16-29-066/17		
25	1	Führungsband PTFE driving band		08-39-187/93	=	=	=	=		
26	3	Quadring Quadring Q4216-N7004		58-01-236/83	=	=	=	=		
27	2	K-Dichtung Piston seal		PKK-82 58-01-760/83	=	=	=	PKK-102 58-01-761/83		
28	1	Zyl.Kerbstift Cyl.pin 6x14,8		67-15-055/12	=	=	=	=		
29	2	O-Ring O-ring		OR 82,22x2,62 NBR 70-75 Shore A				OR 101,27x2,62 NBR70-75 Shore A		
30	1	Kolben HZyl. Piston for main actuator		16-29-070/12	=	=	=	16-29-071/12		
31	1	Deckel HZyl. Cover for main actuator		16-00-209/93	16-00-208/93	16-00-207/93	=	16-00-210/93		
32	1	Führungsband PTFE driving band		08-39-198/93	=	=	=	08-39-188/93		
33	1	Quadring Quadring Q4230-E7509		58-01-329/63	=	=	=	58-01-238/63		
34	1	O-Ring O-ring OR-9,25x1,78		58-06-029/64	=	=	=	=		
35	2	Gehäusedichtung * Housing seal		58-33-542/	=	=	=	58-33-642/		
36	2	Tellerdichtung * Seat seal		58-33-493/	=	=	=	58-33-643/		
37	2	Schaftdichtung Shaft seal		58-33-016/23	=	=	=	58-33-017/23		

Ersatzteilliste: spare parts list:

Doppelsitzventil DA3SLD seat lift detection
Double seat valve DA3SLD seat lift detection
1,5-4 zoll / inch

Blatt 4

	Datum	Name
Gezeichnet	28.09.06	Trytko
Geprüft	28.09.06	Spliethoff
Normgepr.		

Datum	09/06								
Name	Trytko								

APV Rosista GmbH
D-59425 Unna
Germany

RN 01.053.76-1

Pos. item	Menge quantity	Benennung description	1" WS-Nr. ref.-no.	1,5" WS-Nr. ref.-no.	2" WS-Nr. ref.-no.	2,5" WS-Nr. ref.-no.	3" WS-Nr. ref.-no.	4" WS-Nr. ref.-no.	WS-Nr. ref.-no.	WS-Nr. ref.-no.
38	1	Führungsring Quide ring		08-39-080/93	=	=	=	=		
39	2	Sitzdichtung * Seat seal		58-33-044/	=	=	=	58-33-045/		
40	1	Sitzring Seat ring		16-00-190/42	=	=	=	16-00-191/42		
41	1	Mitteldichtung * Seal		58-33-047/	=	=	=	58-33-048/		
42	1	O-Ring 12x1 O-ring		58-06-040/63	=	=	=	=		
43	1	O-Ring O-ring		69x3 58-06-295/63	=	=	=	100x3 58-06-490/63		
44	1	Verschluß-Stopfen Locking plug		08-74-014/93	=	=	=	=		
45	1	Sicherungsmutter M10x1 Self-locking nut		65-50-087/15	=	=	=	=		
46	1	G-Verschraubung Straight union		08-63-003/13	=	=	=	=		
	1	Ventileinsatz ** Valve insert		16-36-250/	16-36-251/	16-36-252/	16-36-254/	16-36-256/		
		Dichtungssatz / seal kit Pos. 32, 33, 34, 35, 36, 37, 39, 41, 42 nur im kompletten Dichtungssatz erhältlich item. 32, 33, 34, 35, 36, 37, 39, 41, 42 available as complete seal kits only								
	1	Dichtungssatz FPM Seal kit		58-34-686/00	=	=	=	58-34-689/00		
	1	Dichtungssatz EPDM Seal kit		58-34-686/01	=	=	=	58-34-689/01		
	1	Dichtungssatz VMQ Seal kit		58-34-686/02	=	=	=	58-34-689/02		
	1	Dichtungssatz HNBR Seal kit		58-34-686/06	=	=	=	58-34-689/06		

10/95

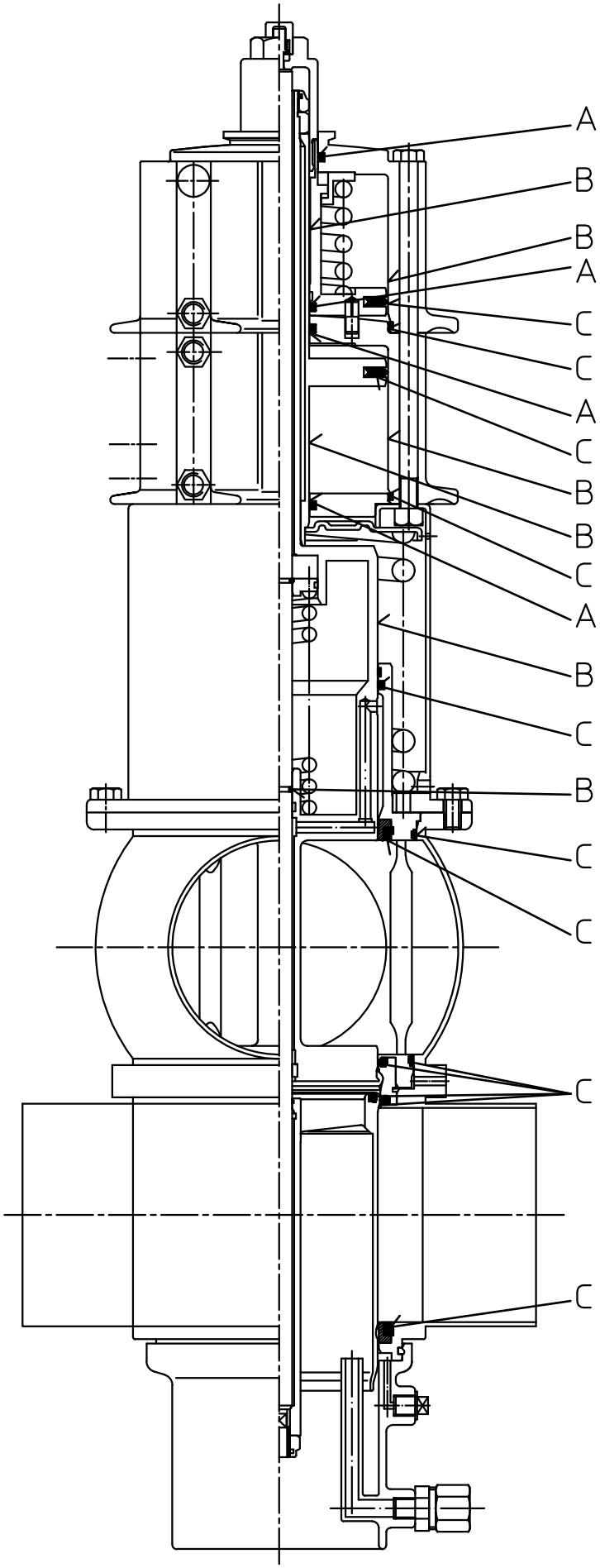

Actuator parts:

Grease: Autol Top 2000
25 ml tube. ref.-No.:70-01-008/93

A - bearing surface and dynamic seal with continuous coating.

B - surface of cylinder and rod with continuous coating.

C - lightly grease seals for installation.

Parts in contact with product:

Grease: for EPDM, HNBR and FPM
Klüber Paraliq GTE 703
0,75 kg can ref.-No.: 70-01-019/93
60 g tube ref.-No.: 70-01-018/93.

for VMQ.
Klüber UH1 84-201
0,6 kg can ref.-No.: 70-01-017/93
60 g tube ref.-No.: 70-01-016/93.

C A U T I O N !

Avoid grease residues in product area.

Grease all screws and threads before installation.
Recommendation: Klüber Grease UH1 84-201

Datum:	27.4.99	19.4.00	16.11.00								
Name:	Evering	Evering	Evering								
geprüft:	Spl/Pl	Spl/Pl									

DA3 Lubrication Chart

APV Rosista GmbH
D-59425 Unna
Germany

Blatt 1 von 1

RN GB 260.064-1