APV
AN SPX BRAND

Operating Manual

DELTA SDT4

Double Seal - Tank Outlet Valve

Read and understand this manual prior to operating or servicing this product.

SPX

UK

APV
AN SPX BRAND

CE

Declaration of Conformity for Valves and Valve Manifolds

APV Rosista GmbH, Zechenstr. 49, D-59425 Unna-Königsborn
as manufacturer with sole responsibility declares that the

double seat valves of the series D2, SD4, SDT4, SDM4, SWcip4, DSV, DA3, DE3, DEU3, DET3, DKR2, DKRT2, DKRH2
in the nominal diameters DN 25 - 150, 1" – 6" and 1 Sh5 - 6 Sh5

butterfly valves of the series SV1 and SVS 1 F
in the nominal diameters DN 25 - 100, DN 125 - 250 and 1" – 4"

ball cocks of the series KH, KHV
in the nominal diameters DN 15 - 100

single seat, diaphragm and spring loaded valves of the series S2, SW4, SWmini4, SWT4, M3, MF3, M4, MF4, MP4, MS4, AP1, APT1, CPV, RG4, RGM4, RGE4, RGEM4, PR2, PR3, PR4, SI2, UF3, VRA,VRAH
in the nominal diameters DN 10 - 150, 1/2" – 4" and 1 Sh5 - 6 Sh5

and the valve manifolds installed thereof

meet the requirements of the Directives 89/392/EEC (amendment 93/44/EEC), replaced by 98/37/EC and GSG - 9.GSGV.

For official inspections, APV Rosista GmbH presents a technical documentation according to appendix V of the Machinery Directive, this documentation consisting of documents of the development and construction, description of measures taken to meet the conformity and to correspond with the basic requirements on safety and health, incl. an analysis of the remaining risks as well as an operating manual with safety instructions.

The conformity of the valves and valve manifolds is guaranteed.

D-59425 Unna-Königsborn, June 04, 2008
APV Rosista GmbH

ppa. Baumbach

Manager Research and Development

UK

	Table of Contents :	Page :

1. General Terms

This operating manual has to be read carefully and observed by the competent operating and maintenance personnel.

We have to point out that we will not accept any liability for damage or malfunctions resulting from the non-compliance with this operating manual.

Descriptions and data given herein are subject to technical changes.

2. Safety Instructions

DANGER!

- The technical safety symbol draws your attention to important directions for operating safety. You will find it wherever the activities described are bearing risks of personal injury.
- Electric and pneumatic connections must be separated.
- Before any maintenance of the valve, the line system must be **depressurized**.
- **Do not reach into the open valve.**
- Risk of injury by suddenly operating valve. In dismantled state there is the risk of bruising at movable parts of the valve.
- Observe service instructions to ensure safe maintenance of the valve.
- **Attention!**
  With valve design NC (normally closed): Before releasing the housing screws, the valve insert must be relieved by controlling the actuator.
- The welded actuator is under spring load, **do not** open it by force.

3. Mode of Operation

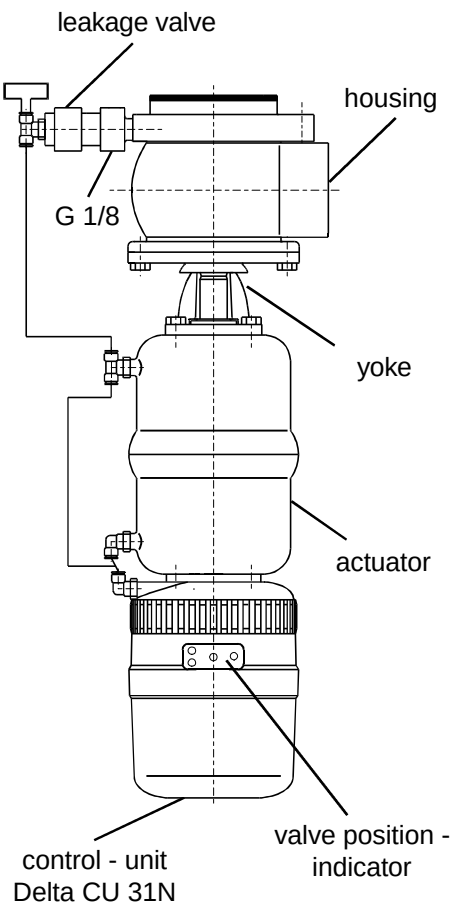

Double seal tank outlet valves DELTA SDT4 were developed for applications in the brewing and beverage industries, dairy and food industries as well as for chemical and pharmaceutical use.

The field of application of DELTA SDT4 valves comprises the safe shut-off of line sections which are separated by two disc seals. Between the seals is a leakage chamber which is forcibly closed by the two leakage valves or open to the atmosphere.

A leakage at the disc seals is discharged via the leakage valves to the atmosphere and indicated.

- Operation by pneumatic actuator with air connection.
  The actuator is generally installed in normally closed (NC) function.
- The inner parts of the actuator are maintenance-free.
- As standard design, a control unit DELTA CU31N with NOT element for the pneumatic control of the valve is installed on the actuator. The NOT element has the task to increase the closing forces of the closed valve.
- The position of the valve shaft is indicated by the yellow luminous diodes in the control unit.
- Observe the service instructions to ensure a safe maintenance of the valve.

4. Auxiliary Equipment

tank bottom welding flange

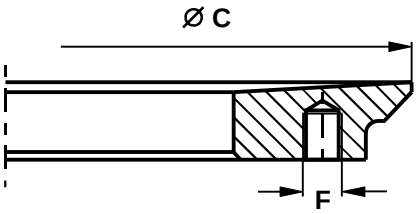

DN	inch	Ø C	F
25 40	1” 1,5”	138	M8
50	2”	153	M8
65	2,5”	168	M8
	3”	182	M8
80		200	M10
100	4”	223	M10

The tank bottom welding flange for the SDT 4 valve does not form part of the scope of supply.

Order reference numbers for the tank bottom welding flange:

DN	inch	ref. - No.:
25 40	**1” 1,5”**	**31B 15 - 01 - 391/42**
50	**2”**	**31B 15 - 01 - 441/42**
65	**2,5”**	**31B 15 - 01 - 491/42**
	3”	**31B 15 - 01 - 566/42**
80		**31B 15 - 01 - 541/42**
100	**4”**	**31B 15 - 01 - 641/42**

4. Auxiliary Equipment

PSH

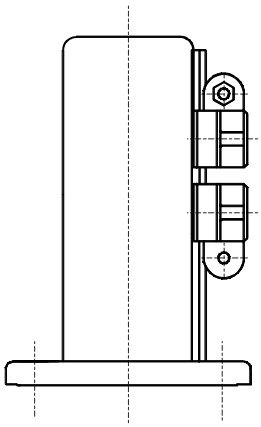

- **Valve position indication**
  A proximity switch holder (PSH) for the valve position indication can be installed at the actuator.

  Attention: If the valve is equipped with a valve position indicator or a control unit **without** NOT element, the max. closing pressure reduces (s. page 9, max. product pressures).

- Proximity switches to signal the limit position of the valve disc can be mounted to the proximity switch holder (PSH) if required.
  We recommend to use our APV standard types:
  operating distance: 5 mm / diameter: 11 mm.
  If the operator decides to use valve position indicators other than APV type, we cannot take over any guarantee for a faultless function.

- **Control Unit**
  The assembly of a control unit CU3 on the SDT4 valve is possible.

  The following different designs are available:

	1 solenoid valve (EMV)	**1 solenoid valve (EMV) with NOT element**
Direct Connect ref. - No.:	**CU31 Direct Connect** 16-31-232/93	**CU31N** 16-31-233/93
Profibus ref. - No.:	**CU21V** 16-31-236/93	**CU21 VN** 16-31-237/93
Device Net ref. - No.:	**CU31 Device Net** 16-31-240/93	**CU31N Device Net** 16-31-241/93
AS - Interface ref. - No.:	**CU31 AS - Interface** 16-31-244/93	**CU31N AS - Interface** 16-31-245/93

control unit DELTA CU with adapter

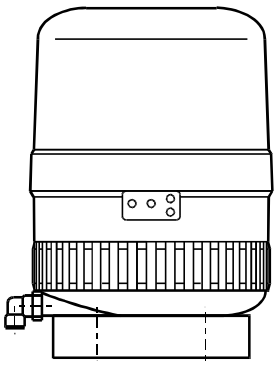

- For the installation of the control unit on the SD 4 valve an adapter is required.

	adapter
designation : ref. - No.:	**CU 2 adapter - SW4 / SD4 / M4** 08-48-415/93

5. Cleaning

For the cleaning of SDT4 valves distinction is made between two areas.

- **The flow chambers**
  The passages of the valve are cleaned by the cleaning liquid during the cleaning of the connected pipelines or during the tank cleaning process.

- **The leakage chamber**
  Cleaning of the leakage chamber is undertaken via the leakage valves. The cleaning liquid is supplied via one leakage valve and discharged to the atmosphere via the second leakage valve.

  The restraint passage of the cleaning liquid provides for a perfect cleaning of the whole leakage chamber.

  Under normal conditions, 15 valves DN 25- 100, 1” - 4” can be cleaned by one spray distribution line DN 25.

  Recommendation for cleaning times with common operating conditions and CIP liquids.

cleaning step	CIP - spraying
pre - flushing	3 x 10 sec.
caustic flushing 80 ^{o} C	3 x 10 sec.
intermediate flushing	2 x 10 sec.
acid flushing	3 x 10 sec.
subsequent flushing	2 x 10 sec.

- Depending on the pressure ratio, cleaning temperatures and degree of soiling, different times have to be adjusted.

- Flushing quantity per CIP spraying **about 1,2ltr/10s**

- Cleaning pressure at CIP cleaning connection : **min. 2 bar.**
  max. 5 bar.

cleaning of the leakage chamber via the leakage valves

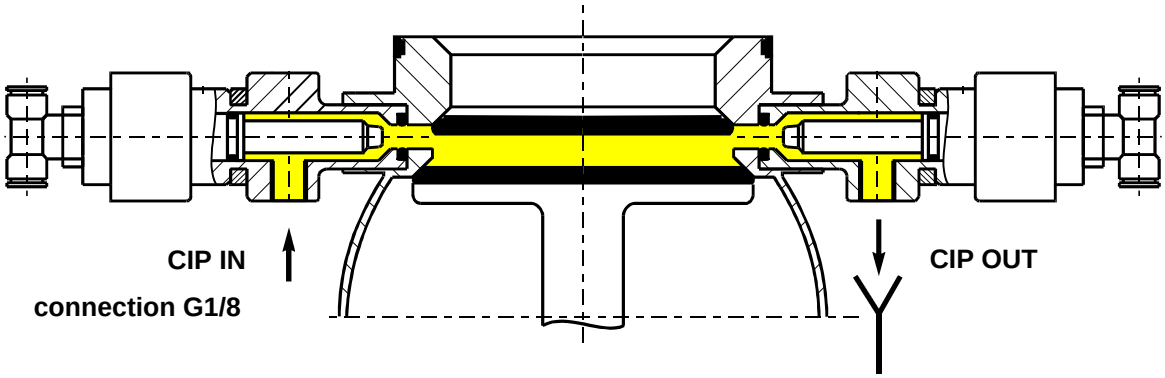

6. Installation

- Installation has to be done in such a way that fluids can drain off the valve housing and is preferably to be realized in vertical position.

- The valve housing cannot be welded direct into the pipeline. At the side ports of the valve housing separate connections (flanges or unions) must be provided.

- **Attention**: Observe welding instructions.

6.1 Welding Instructions

SDT 4

- **Tank bottom flange:**
  Dismantle the tank bottom flange from the valve housing. See to the positions of the holes (position of valve housing ports) during welding.

- **Valve housing:**
  Before welding of the separate connections (flanges or unions) to the valve housing, take the valve insert and the two leakage valves out of the housing. Remove the housing seal from the tank bottom flange. See to a careful dismantling of the valve insert to avoid damage.

- Welding may only be carried out by certified welders (EN 287-1). (Seam quality EN 25817 „B“).

- The welding of the separate connections must be undertaken in such a way that deformation strain cannot be transfered from the outside to the valve body.

- The preparation of the weld seam up to 3 mm thickness must be carried out in butt manner as a square butt joint without air. (Consider shrinkage!)

- TIG orbital welding is best.

- After welding of the valve housings or of the mating flanges and after work at the pipelines, the corresponding parts of the installation or pipelines must be cleaned from welding residues and soiling. If these cleaning instructions are not observed, welding residues and dirt particles can settle in the valve and cause damage.

- Any damage resulting from the nonobservance of these welding instructions is not subject to our guarantee.

7. Dimensions / Weights

SDT4 with CU

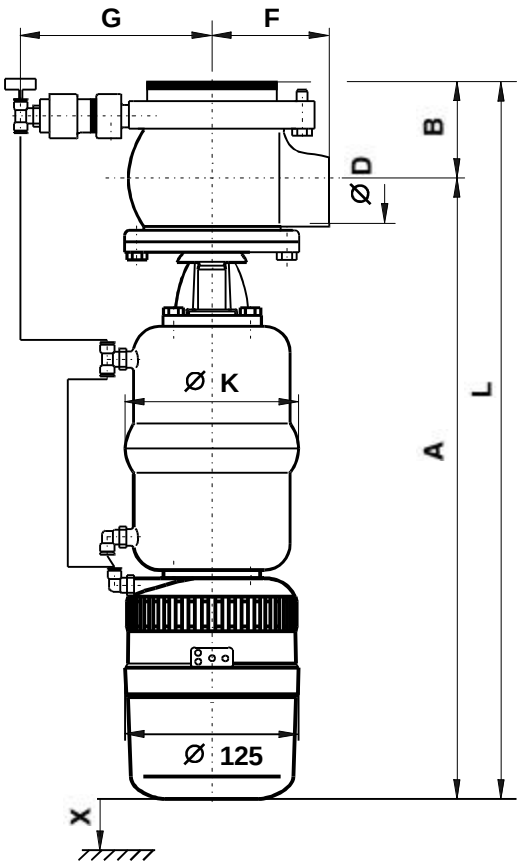

proximity switch holder PSH

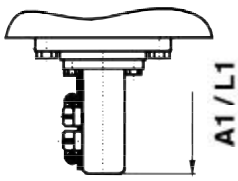

DN	A1	L1
25	337	387
40	343	399
50	380	442
65	388	459
80	441	520
100	451	540
inch		
1”	335	383
1,5”	341	395
2”	379	440
2,5”	385	453
3”	436	510
4”	449	536

DN	A	B	Ø D	F	G	L	inst.dimension X in mm	stroke in mm	Ø K	weight in Kg
25	397	50	26	67	144	447	200	15	86	6,8
40	403	56	38	67	144	459	200	25	86	7,8
50	440	62	50	72	151	502	200	28	126	10,3
65	448	70	66	85	160	519	200	28	126	12,2
80	501	80	81	98	174	580	200	28	189	18,1
100	511	89	100	111	187	600	200	28	189	21,0
inch										
1”	395	48,3	22,6	67	144	443	200	15	86	6,8
1,5”	401	54,5	34,9	67	144	455	200	25	86	7,8
2”	439	60,9	47,6	72	151	500	200	28	126	10,3
2,5”	445	67,2	60,3	85	160	513	200	28	126	12,2
3”	496	73,1	72,9	90	167	570	200	28	189	18,2
4”	509	87,8	97,6	111	187	596	200	28	189	21,0

8. Technical Data

Product - wetted parts :		**316 L, 1.4404**
Other parts :		**1.4301**
Seals :	standard **:**	**EPDM**
Option :		**VMQ, FPM, HNBR**
Actuator :		**1.4301**
max. operating temperature :		**135°C EPDM, HNBR**
		***VMQ, *FPM**
short-term load :		**140°C EPDM, HNBR**
		***VMQ, *FPM**
		*** no steam**
CIP - connection for leakage valves :		**G1/8**
Air connection (for hose) **:**		**6x1mm**
max. pneumatic air pressure :		**8 bar**
min. pneumatic air pressure :		**6 bar**

(Dry and clean pneumatic air must be used only!)

Closing times for double seal valve DELTA SDT 4
The opening and closing times can be fixed by adjusting the throttle screw at the solenoid valve.

8. Technical Data

DELTA SDT 4 max. product pressures in (bar) valve normally closed without NOT - element or with compressed air failure

		Ø 74 mm actuator	Ø 110 mm actuator	Ø 165 mm actuator
DN	**inch**			
25	**1”**	6,4	16,0	
40	**1,5”**	3,6	9,6	
50	**2”**		6,0	11,2
	2,5”		4,7	11,6
65			3,5	9,3
	3”			8,0
80				6,0
100	**4”**			4,4

DELTA SDT 4 max. product pressure in (bar) valve normally closed and with NOT - element

		Ø 74 mm actuator	Ø 110 mm actuator	Ø 165 mm actuator
DN	**inch**			
25	**1”**	16,0	16,8	
40	**1,5”**	12,4	17,6	
50	**2”**		17,6	17,6
	2,5”		14,0	16,0
65			10,5	17,6
	3”			17,6
80				17,2
100	**4”**			12,8

max. product pressure limited to 17,6 bar by seal technology

kvs values for SDT 4 valve in m^3/h

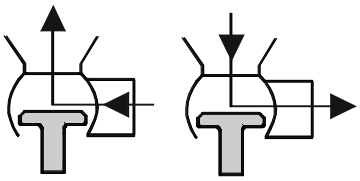

	filling	emptying
DN		
25	19	20
40	42	39
50	88	70
65	145	120
80	175	190
100	220	265
inch		
1”	15	16
1,5”	39	26
2”	79	63
2,5”	124	106
3”	155	150
4”	215	258

9. Maintenance

- The **maintenance intervals** depend on the corresponding application and are to be determined by the operator himself carrying out **temporary checks**.

- Required tools:

- 1 x spanner SW13
- 1 x spanner SW17
- 1 x spanner SW19
- 1 x hexagon socket screw key 6 mm

- Change of seals is done according to service instructions.

- **Slightly grease all seals before their installation**.

  Recommendation:
  APV food-grade-grease for **EPDM, HNBR, FPM**
  (0,75 kg/tin - ref.-No. 000 70-01-019/93)
  (60 g/tube - ref.-No. 000 70-01-018/93)
  or
  APV food-grade-grease for **VMQ (Silcone)**
  (0,6 kg/ Dose - WS-Nr. 000 70-01-017/93)
  (60 g/ Tube - WS-Nr. 000 70-01-016/93)

! **No matter what type of application, use only those greases being suited for the respective seal material !**

Assembly tool for seat seal (11.1)
(Assembly tool to be used for new valve design produced from Nov. 2000 only.)

To simplify the installation of the seat seal, the following assembly tools are available.

Assembly tool SD4		
DN	**inch**	**ref.-No.:**
25	**1”**	000 51 - 13 - 200/17
40	**1,5”**	000 51 - 13 - 201/17
50	**2”**	000 51 - 13 - 202/17
	2,5”	000 51 - 13 - 203/17
65		000 51 - 13 - 204/17
	3”	000 51 - 13 - 205/17
80		000 51 - 13 - 206/17
100	**4”**	000 51 - 13 - 207/17

10. Service Instructions

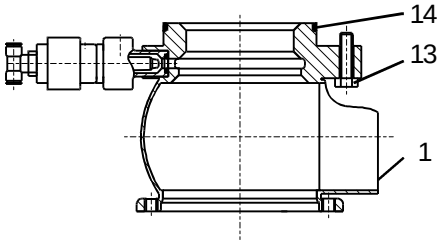

DELTA SDT4
The item numbers refer to the corresponding spare parts lists
DN: RN 01.054.65 / INCH: RN 01.054.65-1

I. Dismantling from the line system

a. Cut off tank and line pressure and empty lines if possible.

b. Remove cleaning connections.

c. Release separate connections at the side ports of the valve housing. Remove flange screws **(13)** from the tank bottom flange.

d. Screw one flange screw in the threaded bore M8 of the housing flange. Thus, the complete valve is lifted out of the tank bottom flange.

e. Carefully pull the complete valve out of the tank bottom flange.

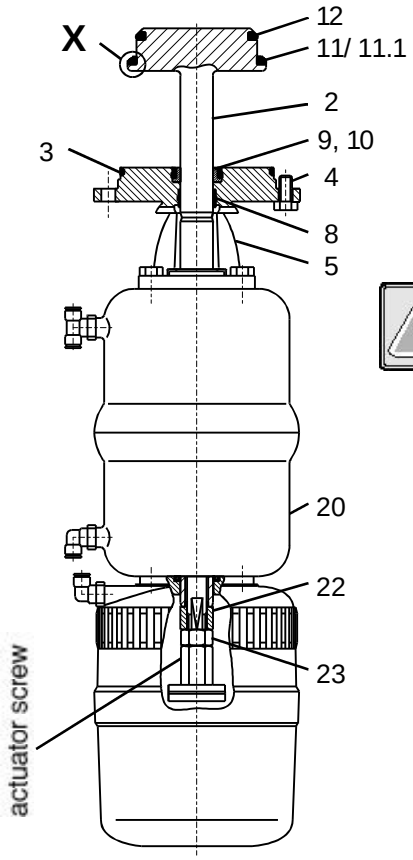

II. Dismantling of the valve insert

a. Control actuator with air.

Do not touch movable valve parts!
Risk of injury.

b. Remove housing flange screws **(4)**. Screw one flange screw into the threaded bore M8 of the housing flange. Thus, the valve insert is lifted out of the housing **(1)**.

c. Pull valve insert out of the housing.

d. Cut off compressed air and remove compressed air supply.

The actuator is supplied with air via the NOT element.

e. Detach the control unit from the actuator **(20)**.
(Turn ring in anticlockwise direction.)

III. Dismantling of wear parts (product-wetted parts)

a. Remove housing seal **(3, 14)**.

b. Undo actuator screw in the control unit.

c. Unscrew hexagon nut **(23)** by holding up the centering washer **(22)**. Detach centering washer.

d. Pull valve shaft **(2)** out of the actuator **(20)**, remove seat seals **(11 / 11.1, 12).**

e. Release yoke **(5)** from actuator **(20)**.

f. Remove seat seal **(10)**, shaft seal **(9)** and guide bush **(8)**.

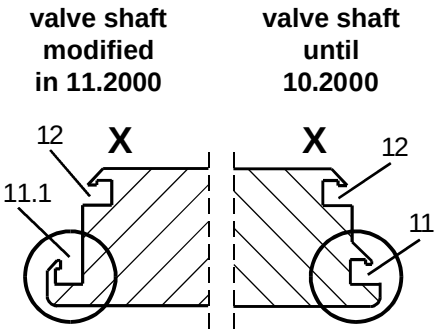

10. Service Instructions

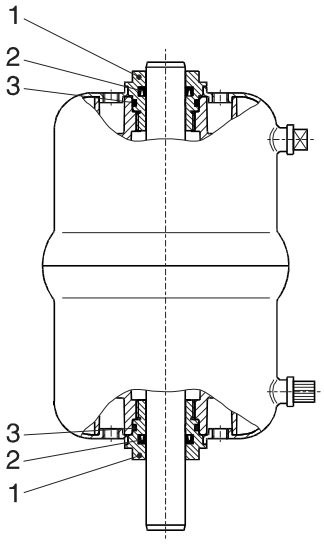

IV. Actuator

The item numbers refer to the spare parts lists
actuator RN: 01.054.86

a. Remove air hoses from actuator.

b. Undo inner hexagon screws from the adapter of the control unit.

c. Remove the two seal screws **(1)** while holding up the actuator with a strap wrench. Detach the O-rings **(3)** and V-seals **(2)**.

V. Installation of seals and assembly of actuator

a. Install the O-rings **(3)** and V-seals **(2)** in the seal screw **(1)**.
Observe the right direction of installation of the V-seal.

b. Slide the seal screws over the piston rod at both sides of the actuator and fasten the screws.

c. Fix the adapter for the control unit and the yoke on the actuator.
Attention: Observe the position of the adapter.

d. Fasten the air hoses.

illustration to VI. a. and e.

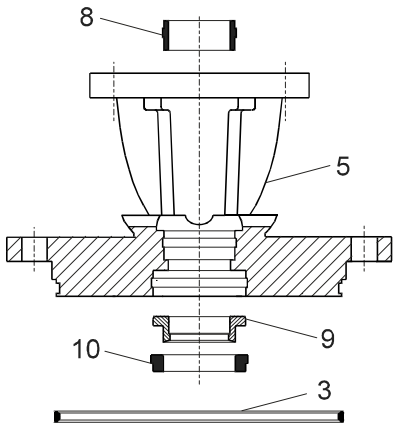

modified from 11.2000

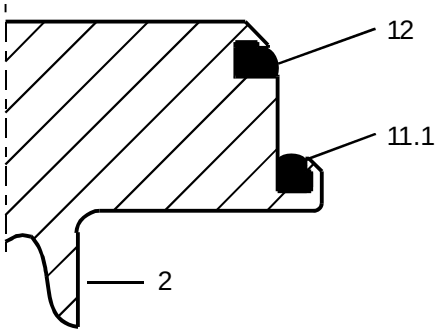

VI. Installation of seals and assembly of valve

The item numbers refer to the corresponding spare parts lists
DN: RN 01.054.65 / inch: RN 01.054.65-1

a. Insert the guide bushes **(8)** in the yoke **(5)**.
Place the shaft seal **(9)** and press in the slightly greased seat seal **(10)**.
See to the right direction of installation.

b. Dismantle the yoke **(5)** from the actuator **(20)**.

c. Insert the two seat seals **(11, 12)** in the shaft **(2)**.
During the installation into the seal groove, vent the groove between seal and groove wall with a thin object.
See to an even fit of the seals.
For the modified design of the seat seal 11.1, use the assembly tool to insert the seal (see page 15).

d. Slide the shaft **(2)** through the yoke **(5)** and actuator **(20)**, place the centering washer **(22)** and tighten the nut **(23)** while holding up the centering washer.
Tightening torque: 40 Nm.
Tighten the actuator screw.

e. Slightly grease the housing seals **(3, 14)** and install them in the corresponding grooves.

10. Service Instructions

VII. Installation of valve

a. Place the control unit **(22)** on the adapter **(21)** and secure it with the fastening ring.

b. Connect compressed air supply and control the actuator **(20)** with air.

Do not touch movable valve parts!
Risk of injury

c. Place the insert carefully into the housing **(1)** and fasten the hexagon screws **(4)**. Do not damage the housing seal **(3)** during this process.

d. Cut off compressed air.

e. Check the basic adjustment of the valve position indicator.

- The shift points can be adjusted by turning the positioning screw in the control unit.

f. Install the valve carefully in the tank bottom flange and fasten it with the hexagon screws **(13)**. Do not damage the housing seal **(14)** during this process.

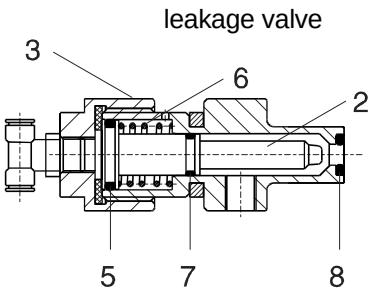

VIII. Maitenance of leakage valves

The item numbers refer to the spare parts lists
leakage valves: RN 01.054.67.

a. Pull off pneumatic air hoses at the two leakage valves.

b. Shut off CIP supply line and discharge it.

c. Remove CIP supply and outlet line from the leakage valves.

d. Release inner hex. screw and remove bracket.

e. Turn off cover **(3)** and pull off piston **(2)** and spring **(6)**.

f. Dismantle all seals **(5, 7, 8)**.

g. Installation is done in reverse order.

11. Trouble Shooting

The item numbers refer to the respective spare parts drawings.

- Valve is not tight, leakage via the leakage valves	:	Replace seat seals **(11, 12)**. Check line pressure: **adm. line pressure see chap. 8.**
- Leakage at the leakage valve	:	Replace O - rings **(5, 7 ,8)**. Check cleaning supply line.
- Leakage between hosing and yoke-flange	:	Replace housing seal **(3)**.
- Leakage between tank bottom flange and valve housing	:	Replace housing seal **(14)**.
- Shaft passage in yoke is untight	:	Replace shaft seal **(9, 10)**.
- Air escapes from the actuator **(see spare parts list RN: 01.054.86)**	:	Dismantle actuator **(18)** from valve, replace V-seal **(2)** and O-ring **(3)** in the seal screw **(1)**.
- Actuator does not work, air escapes permanently from the venting plug	:	Replace actuator.
- Valve position indication is missing or unprecise	:	Carry out fine adjustment according to service instructions of control unit.

12. Assembly Tool

modified from 11.2000

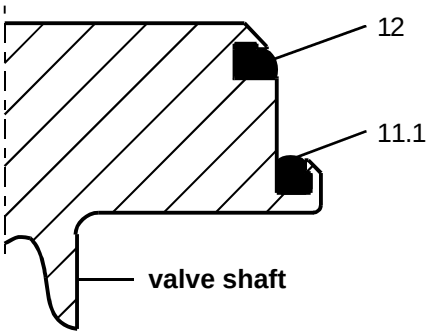

Attention: **By means of the assembly tool only the seat seal (11.1) can be installed. This seat seal must be mounted in the valve shaft, at first.**

Then insert the seat seal (12) in the groove. Press the seal circumferentially into the groove with an assembly tool (screw driver with round edges). After the installation of the seat seal, vent the seal groove between the seal and the groove wall with the assembly tool.

See to an even fit of the seal.

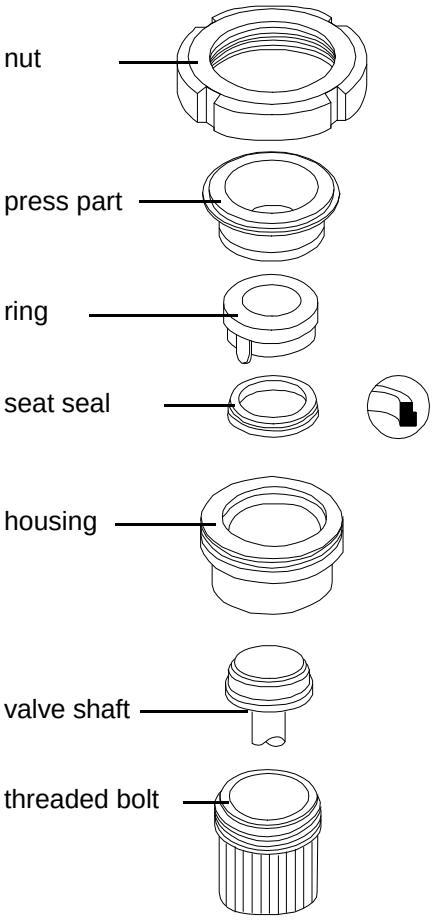

The assembly tool consists of:
- nut
- press part
- ring with venting nose
- housing
- threaded bolt

Installation of seat seal in valve shaft

1. Insert valve shaft into the housing in such a manner that the seal groove is in the valve housing.
2. Mount the shaft in the housing by means of the threaded bolts. Clamp the housing in the vise.
3. Lightly grease seat seal with APV food-grade grease. Place seal on the ring with venting plug until it stops.
4. Insert the ring with the seat seal into the housing and press it down until it stops.
5. Insert the press part into the housing. Screw on the nut and tighten it by a hook spanner until it stops.
6. Release nut. Pull ring and press part out of the housing.
7. Take housing out of the vise, remove threaded bolts. Take valve shaft out of the housing.

Check the even fit of the seat seal.

13. Modification of Actuator

With SD4 valves, the size of the actuator can be changed.

To increase or decrease the actuator sizes
(Ø 74 mm, Ø 110 mm, Ø 165 mm), the corresponding line pressures must be considered, see table page 9.

I. Modification of actuator
Dismantling

a. The dismantling of the double seal valves is done as described in **10, items I. and II.**

b. To change the actuator size, the guide rod **(6)** must be replaced as follows:
Clamp the valve seat in a vice.

Attention: See to the valve seat not being damaged (use protective jaws or cleaning rags). The slightest damage at the shaft rod can produce leakages.

c. The guide rod can be turned out of the shaft by means of the centering washer **(20)** and a spanner SW17.

Assembly

a. Turn the corresponding guide rod into the shaft to the actuator.
Tightening torque: 40 Nm

b. Further assembly as described in **10, items V. to VIII.**

14. Spare Parts

(see annex)

BA SDT4 000002
ID-No.: H 2 0 6 1 0 2

UK

Translation of original manual

rev. 0

WHERE IDEAS MEET INDUSTRY

Your local contact:

APV
Zechenstraße 49
D-59425 Unna

Phone: +49(0) 23 03/ 108-0 Fax: +49(0) 23 03 / 108-210

For more information about our worldwide locations, approvals, certifications, and local representatives, please visit www.apv.com.

Ersatzteilliste: spare parts list:

Ventil SDT4 FS-CU3 und VSM DN 25-100
Valve SDT4 FS-CU3 and PSH DN 25-100

Besteht aus 3 Blatt Blatt 1

	Datum	Name
Gezeichnet	23.6.99	Trytko
Geprüft	02.8.99	Spliethoff
Normgepr.	02.8.99	Plümper

Datum	06/99	05/02	11/03
Name	Trytko	Trytko	Trytko

APV Rosista GmbH
D-59425 Unna
Germany

RN 01.054.65

Es stehen verschiedene Dichtungswerkstoffe zur Verfügung.
Bitte WS-Nr. ergänzen

The following seal materials are available (fill in last two digits of ref.-no.)

*Dichtungswerkstoff:
material seals:

../13-VMQ
../33-HNBR
../73-FPM
../93-EPDM

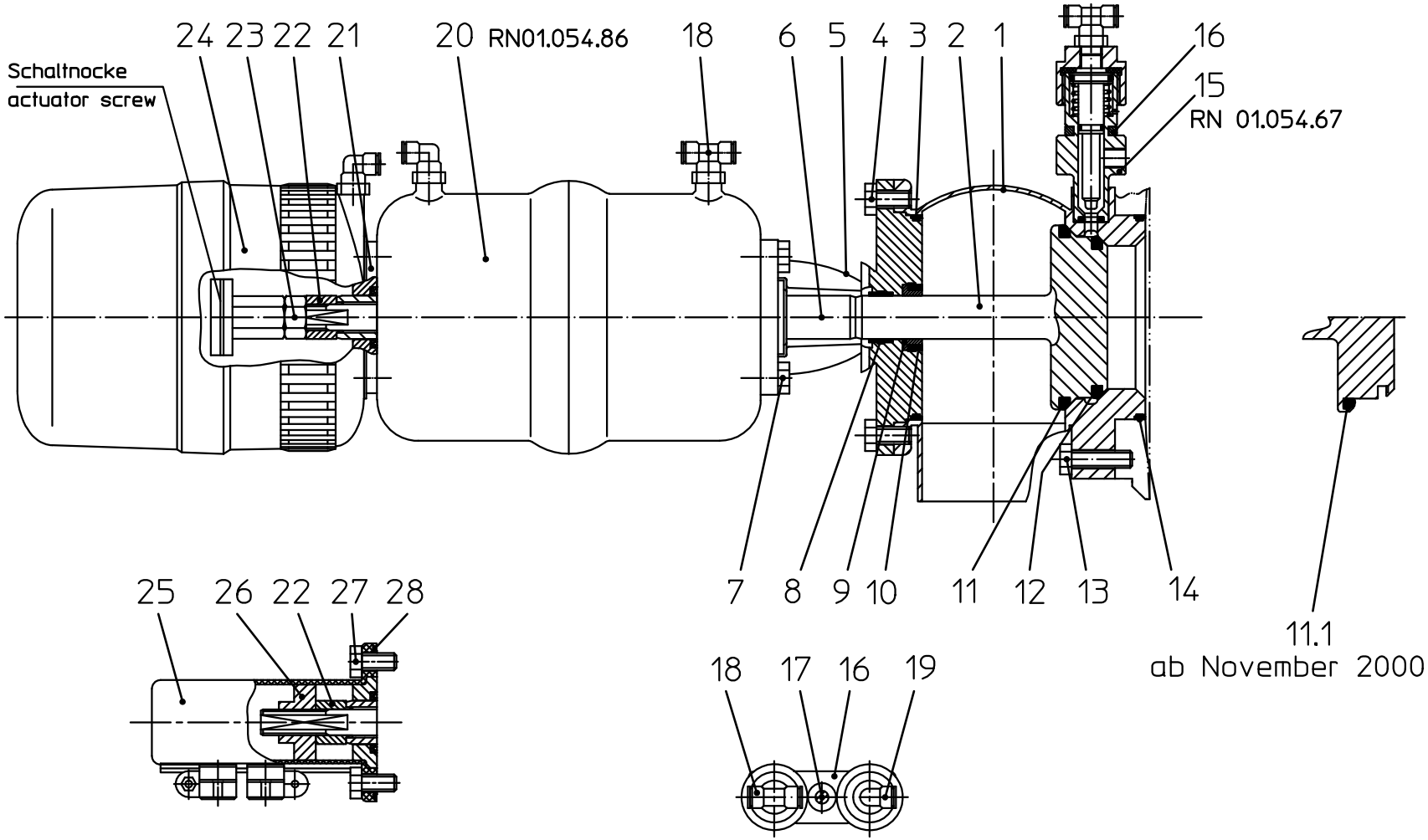

Ersatzteilliste: spare parts list:

Ventil SDT4 FS-CU3 und VSM DN 25-100

Valve SDT4 FS-CU3 and PSH DN 25-100

Blatt 2

	Datum	Name
Gezeichnet	23.6.99	Trytko
Geprüft	02.8.99	Splethoff
Normgepr.	02.8.99	Plümper

Datum	06/99	05/02	02/03	11/03	12/05	08/07			
Name	Trytko	Trytko	Trytko	Trytko	Trytko	Trytko			

APV Rosista GmbH
D-59425 Unna
Germany

RN 01.054.65

Pos. item	Menge quantity	Benennung description	DN 25 WS-Nr. ref.-no.	40 WS-Nr. ref.-no.	50 WS-Nr. ref.-no.	65 WS-Nr. ref.-no.	80 WS-Nr. ref.-no.	100 WS-Nr. ref.-no.	125 WS-Nr. ref.-no.	150 WS-Nr. ref.-no.
1	1	Gehäuse Housing SDT41 1S	15-54-286/47	15-54-386/47	15-54-436/47	15-54-486/47	15-54-536/47	15-54-636/47		
	1	Gehäuse Housing SDT42 1+2S	15-55-286/47	15-55-386/47	15-55-436/47	15-55-486/47	15-55-536/47	15-55-636/47		
2	1	Schaft Valve shaft	15-25-291/42	15-25-391/42	15-25-441/42	15-25-491/42	15-25-541/42	15-25-641/42		
3	1	Gehäusedichtung Housing seal *	58-33-292/	58-33-392/	58-33-442/	58-33-492/	58-33-542/	58-33-642/		
4	4	Skt. Schraube Hex. screw	DIN EN 24017-M8x16-A2-70				DIN EN 24017-M10x16-A2-70			
5	1	Laterne Yoke	15-40-287/47	15-40-387/47	15-40-437/47	15-40-487/47	15-40-537/47	15-40-637/47		
6	1	Zugstange Guide rod	15-23-850/12	=	15-23-851/12	=	15-23-852/12	=		
7	4	Skt. Schraube Hex. screw	DIN EN 24017-M8x16-A2-70				DIN EN 24017-M8x20-A2-70			
8	1	Führungsbuchse Bushing	08-01-178/23	=	=	=	=	=		
9	1	Schaftdichtung Shaft seal	58-33-150/26	=	=	=	=	=		
10	1	Tellerdichtung Seat seal *	58-33-293/	=	=	=	=	=		
11	1	Tellerdichtung Seat seal *	58-33-394/	58-33-444/	58-33-194/	58-33-569/	58-33-544/	58-33-644/	bis November 2000	
11.1	1	Tellerdichtung Seat seal *	58-33-393/	58-33-443/	58-33-109/	58-33-571/	58-33-546/	58-33-646/	ab November 2000	
12	1	Tellerdichtung Seat seal *	58-33-294/	58-33-394/	58-33-444/	58-33-494/	58-33-544/	58-33-644/		
13	4	Skt. Schraube Hex. screw	DIN EN 24017-M8x28-A2-70				DIN EN 24017-M10x30-A2-70			
14	1	Gehäusedichtung Housing seal *	58-33-392/	=	58-33-442/	58-33-492/	58-33-542/	58-33-642/		
15	2	Leckageventil Leakage valve	20-37-068/	=	=	=	=	=		
16	1	Lasche Bracket	08-17-002/12	=	=	=	=	=		
17	1	Zyl. Schraube Cyl. screw	DIN EN ISO 4762-M8x35-A2-70							
18	2	T-Verschraubung Tee connector G 1/8	08-63-370/93	=	=	=	=	=		

Ersatzteilliste: spare parts list:

Ventil SDT4 FS-CU3 und VSM DN 25-100

Valve SDT4 FS-CU3 and PSH DN 25-100

Blatt 3

	Datum	Name
Gezeichnet	23.6.99	Trytko
Geprüft	02.8.99	Spliethoff
Normgepr.	02.8.99	Plümper

Datum	06/99	05/02	02/03	11/03	04/05
Name	Trytko	Trytko	Trytko	Trytko	Trytko

APV Rosista GmbH
D-59425 Unna
Germany

RN 01.054.65

Pos. item	Menge quantity	Benennung description	DN 25 WS-Nr. ref.-no.	40 WS-Nr. ref.-no.	50 WS-Nr. ref.-no.	65 WS-Nr. ref.-no.	80 WS-Nr. ref.-no.	100 WS-Nr. ref.-no.	125 WS-Nr. ref.-no.	150 WS-Nr. ref.-no.
19	1	W-Verschraubung G 1/8 Angular union	08-63-350/93	=	=	=	=	=		
20	1	Steuerkopf Actuator	ø74 15-32-050/17	=	ø110 15-32-051/17	=	ø165 15-32-052/17	=		
21	1	CU2-Adapter SW4, SD4, M4 CU2-adapter	08-48-415/93	=	=	=	=	=		
22	1	Zentrierscheibe Centering nut	15-28-940/12	=	=	=	=	=		
23	1	Skt. Mutter M12 Hex. nut	65-50-101/15	=	=	=	=	=		
24	1	Control-Unit CU31 Direct Connect Control-Unit CU31	16-31-232/93	=	=	=	=	=		
25	1	VSM Gehäuse-SW4 Proximity switch holder housing-SW4	15-33-932/93	=	=	=	=	=		
26	1	Schaltnocke Operating cam	08-52-290/97	08-52-291/97	=	=	=	=		
27	4	Skt. Schraube Hex. screw	DIN EN 24017-M8x16-A2-70							
28	1	O-Ring O-ring	OR 66x2 NBR 70 Shore A							
		Pos. 3, 8, 9, 10, 11, 11.1, 12, 14 sowie Pos. 4, 5, 7, 8 vom Leckageventil RN01.054.67 sind nur im komletten Dichtungssatz erhältlich Item 3, 8, 9, 10, 11, 11.1, 12, 14 and item 4, 5, 7, 8 of leakage valve RN01.054.67 are available as complete seal kits only								
	1	Dichtungssatz FPM Seal kit	58-34-770/00	58-34-771/00	58-34-772/00	58-34-774/00	58-34-776/00	58-34-777/00		
	1	Dichtungssatz EPDM Seal kit	58-34-770/01	58-34-771/01	58-34-772/01	58-34-774/01	58-34-776/01	58-34-777/01		
	1	Dichtungssatz VMQ Seal kit	58-34-770/02	58-34-771/02	58-34-772/02	58-34-774/02	58-34-776/02	58-34-777/02		
	1	Dichtungssatz HNBR Seal kit	58-34-770/06	58-34-771/06	58-34-772/06	58-34-774/06	58-34-776/06	58-34-777/06		

Ersatzteilliste: spare parts list:

Ventil SDT4 FS-CU3 und VSM 1-4 zoll
Valve SDT4 FS-CU3 and PSH 1-4 inch

Besteht aus 3 Blatt Blatt 1

	Datum	Name
Gezeichnet	23.6.99	Trytko
Geprüft	02.8.99	Spliethoff
Normgepr.	02.8.99	Plümper

Datum	06/99	05/02	12/03
Name	Trytko	Trytko	Trytko

APV Rosista GmbH
D-59425 Unna
Germany

RN 01.054.65-1

Es stehen verschiedene Dichtungswerkstoffe zur Verfügung.
Bitte WS-Nr. ergänzen

The following seal materials are available (fill in last two digits of ref.-no.)

*Dichtungswerkstoff:
material seals:
../13-VMQ
../33-HNBR
../73-FPM
../93-EPDM

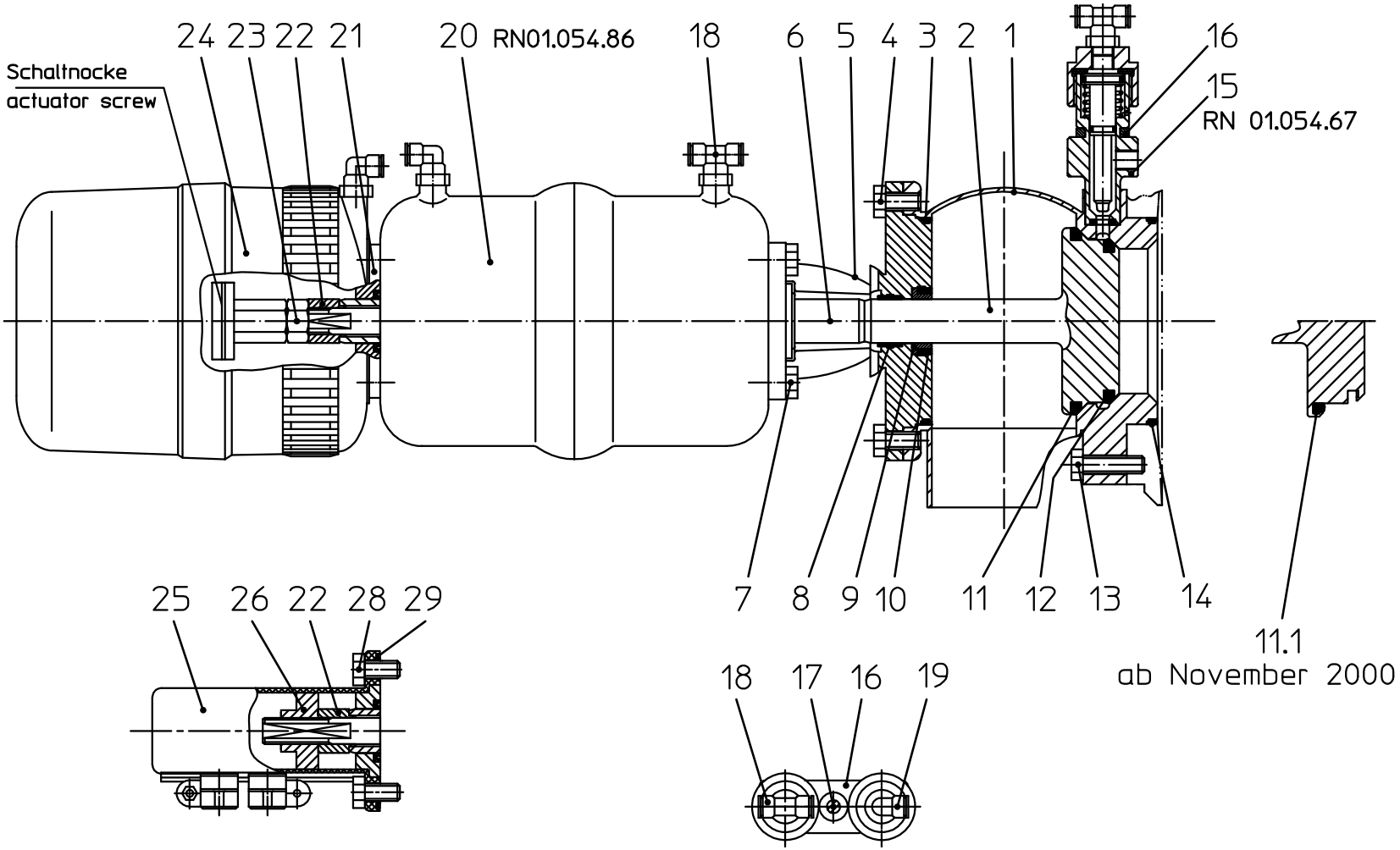

Ersatzteilliste: spare parts list:

Ventil SDT4 FS-CU3 und VSM 1-4 zoll
Valve SDT4 FS-CU3 and PSH 1-4 inch

Blatt 2

	Datum	Name
Gezeichnet	23.6.99	Trytko
Geprüft	02.8.99	Spliethoff
Normgepr.	02.8.99	Plümper

Datum	06/99	05/02	02/03	12/03	12/05	08/07			
Name	Trytko	Trytko	Trytko	Trytko	Trytko	Trytko			

APV Rosista GmbH
D-59425 Unna
Germany

RN 01.054.65-1

Pos. item	Menge quantity	Benennung description	1" WS-Nr. ref.-no.	1,5" WS-Nr. ref.-no.	2" WS-Nr. ref.-no.	2,5" WS-Nr. ref.-no.	3" WS-Nr. ref.-no.	4" WS-Nr. ref.-no.	WS-Nr. ref.-no.	WS-Nr. ref.-no.
1	1	Gehäuse Housing SDT41 1S	15-54-311/47	15-54-411/47	15-54-461/47	15-54-511/47	15-54-561/47	15-54-661/47		
	1	Gehäuse Housing SDT42 1+2S	15-55-311/47	15-55-411/47	15-55-461/47	15-55-511/47	15-55-561/47	15-55-661/47		
2	1	Schaft Valve shaft	15-25-316/42	15-25-416/42	15-25-466/42	15-25-516/42	15-25-566/42	15-25-666/42		
3	1	Gehäusedichtung Housing seal *	58-33-292/	58-33-392/	58-33-442/	58-33-492/	58-33-567/	58-33-642/		
4	4	Skt. Schraube Hex. screw	DIN EN 24017-M8x16-A2-70				DIN EN 24017-M10x16-A2-70			
5	1	Laterne Yoke	15-40-287/47	15-40-387/47	15-40-437/47	15-40-487/47	15-40-562/47	15-40-637/47		
6	1	Zugstange Guide rod	15-23-850/12	=	15-23-851/12	=	15-23-852/12	=		
7	4	Skt. Schraube Hex. screw	DIN EN 24017-M8x16-A2-70				DIN EN 24017-M8x20-A2-70			
8	1	Führungsbuchse Bushing	08-01-178/23	=	=	=	=	=		
9	1	Schaftdichtung Shaft seal	58-33-150/26	=	=	=	=	=		
10	1	Tellerdichtung Seat seal *	58-33-293/	=	=	=	=	=		
11	1	Tellerdichtung Seat seal *	58-33-394/	58-33-444/	58-33-194/	58-33-569/	58-33-544/	58-33-644/	bis November 2000	
11.1	1	Tellerdichtung Seat seal *	58-33-393/	58-33-443/	58-33-109/	58-33-568/	58-33-543/	58-33-646/	ab November 2000	
12	1	Tellerdichtung Seat seal *	58-33-294/	58-33-394/	58-33-444/	58-33-194/	58-33-569/	58-33-644/		
13	4	Skt. Schraube Hex. screw	DIN EN 24017-M8x28-A2-70				DIN EN 24017-M10x30-A2-70			
14	1	Gehäusedichtung Housing seal *	58-33-392/	=	58-33-442/	58-33-492/	58-33-567/	58-33-642/		
15	2	Leckageventil Leakage valve	20-37-068/	=	=	=	=	=		
16	1	Lasche Bracket	08-17-002/12	=	=	=	=	=		
17	1	Zyl. Schraube Cyl. screw	DIN ISO 4762-M8x35-A2-70							
18	2	T-Verschraubung Tee connector G 1/8	08-63-370/93	=	=	=	=	=		

Ersatzteilliste: spare parts list:

Ventil SDT4 FS-CU3 und VSM 1-4 zoll
Valve SDT4 FS-CU3 and PSH 1-4 inch

Blatt 3

	Datum	Name
Gezeichnet	23.6.99	Trytko
Geprüft	02.8.99	Spliethoff
Normgepr.	02.8.99	Plümper

Datum	06/99	05/02	02/03	12/03	04/05
Name	Trytko	Trytko	Trytko	Trytko	Trytko

APV Rosista GmbH
D-59425 Unna
Germany

RN 01.054.65-1

Pos. item	Menge quantity	Benennung description	1" WS-Nr. ref.-no.	1,5" WS-Nr. ref.-no.	2" WS-Nr. ref.-no.	2,5" WS-Nr. ref.-no.	3" WS-Nr. ref.-no.	4" WS-Nr. ref.-no.	WS-Nr. ref.-no.	WS-Nr. ref.-no.
19	1	W-Verschraubung G 1/8 Angular union	08-63-350/93	=	=	=	=	=		
20	1	Steuerkopf Actuator	ø74 15-32-050/17	=	ø110 15-32-051/17	=	ø165 15-32-052/17	=		
21	1	CU2-Adapter SW4, SD4, M4 CU2-adapter	08-48-415/93	=	=	=	=	=		
22	1	Zentrierscheibe Centering nut	15-28-940/12	=	=	=	=	=		
23	1	Skt. Mutter M12 Hex. nut	65-50-101/15	=	=	=	=	=		
24	1	Control-Unit CU31 Direct Connect Control-Unit CU31	16-31-232/93	=	=	=	=	=		
25	1	VSM Gehäuse-SW4 Proximity switch holder housing-SW4	15-33-932/93	=	=	=	=	=		
26	1	Schaltnocke Operating cam	08-52-290/97	08-52-291/97	=	=	=	=		
27	4	Skt. Schraube Hex. screw	DIN EN 24017-M8x16-A2-70							
28	1	O-Ring O-ring	OR 66x2 NBR 70 Shore A							
		Pos. 3, 8, 9, 10, 11, 11.1, 12, 14 sowie Pos. 4, 5, 7, 8 vom Leckageventil RN01.054.67 sind nur im komletten Dichtungssatz erhältlich Item 3, 8, 9, 10, 11, 11.1, 12, 14 and item 4, 5, 7, 8 of leakage valve RN01.054.67 are available as complete seal kits only								
	1	Dichtungssatz FPM Seal kit	58-34-770/00	58-34-771/00	58-34-772/00	58-34-773/00	58-34-775/00	58-34-777/00		
	1	Dichtungssatz EPDM Seal kit	58-34-770/01	58-34-771/01	58-34-772/01	58-34-773/01	58-34-775/01	58-34-777/01		
	1	Dichtungssatz VMQ Seal kit	58-34-770/02	58-34-771/02	58-34-772/02	58-34-773/02	58-34-775/02	58-34-777/02		
	1	Dichtungssatz HNBR Seal kit	58-34-770/06	58-34-771/06	58-34-772/06	58-34-773/06	58-34-775/06	58-34-777/06		

Ersatzteilliste: spare parts list:

Steuerkopf SW4
Actuator SW4

Besteht aus 1 Blatt Blatt 1

	Datum	Name
Gezeichnet	15.1.98	Trytko
Geprüft	15.1.98	Spliethoff
Normgepr.	19.1.98	Plümper

Datum	1/98	12/03	01/06	06/08
Name	Trytko	Trytko	Trytko	Trytko

APV Rosista GmbH
D-59425 Unna
Germany

RN 01.054.86

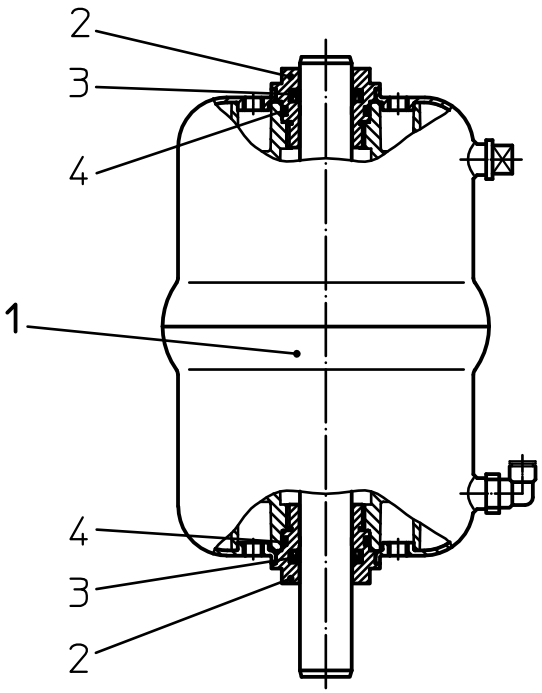

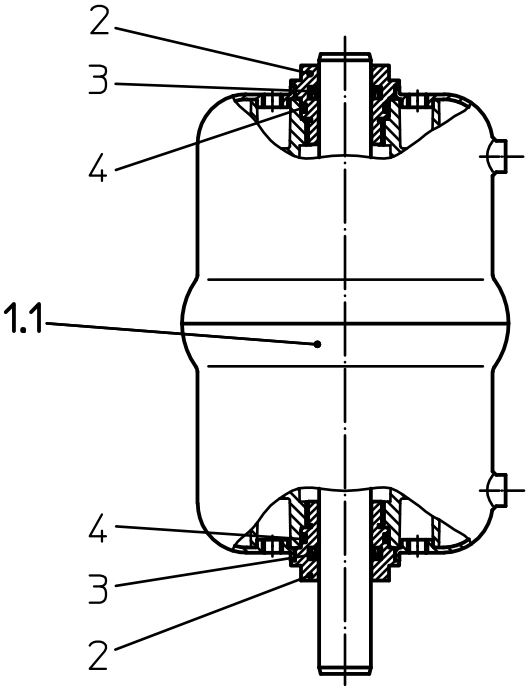

Pos. item	Menge quantity	Benennung description	ø74 WS-Nr. ref.-no.	ø110 WS-Nr. ref.-no.	ø165 WS-Nr. ref.-no.
1		Steuerkopf kpl Feder/Luft Ausf. matt-gl. Actuator complete spring/air design satin fin.	15-32-050/17	15-32-051/17	15-32-052/17
		Steuerkopf kpl Luft/Luft Ausf. matt-gl. Actuator complete air/air design satin fin.	15-32-085/17	15-32-086/17	15-32-087/17
1.1		Steuerkopf kpl Feder/Luft Ausf. 3A-blank Actuator complete spring/air design 3A-bright fin.	3A0 15-32-059/13	3A0 15-32-060/13	3A0 15-32-061/13
		Steuerkopf kpl Luft/Luft Ausf. 3A-blank Actuator complete air/air design 3A-bright fin.	3A0 15-32-057/13	3A0 15-32-065/13	3A0 15-32-066/13
2	2	Dichtungsschraube Seal screw	15-28-840/93	=	=
3	2	V-Dichtung 20x28x4 V-seal	58-32-010/83	=	=
4	2	O-Ring 29-2,5 O-ring	58-06-124/83	=	=

Ersatzteilliste: spare parts list:

Leckageventil SD4

Leakage valve SD4

Besteht aus 1 Blatt Blatt 1

	Datum	Name
Gezeichnet	14.7.98	Trytko
Geprüft	21.7.98	Spliethoff
Normgepr.	17.8.98	Plümper

Datum	7/98	10/02	10/03	09/04
Name	Trytko	Trytko	Trytko	Trytko

APV Rosista GmbH
D-59425 Unna
Germany

RN 01.054.67

Es stehen verschiedene Dichtungswerkstoffe zur Verfügung. Bitte WS-Nr. ergänzen

The following seal materials are available (fill in last two digits of ref.-no.)

*Dichtungswerkstoff: material seals:
../33-HNBR
../64-EPDM
../73-FPM

**Werkstoff metallisch+Dichtung:
material metallic+seal:
../29-HNBR-1.4404
../59-EPDM-1.4404
../69-FPM -1.4404

Pos. item	Menge quantity	Benennung description	WS-Nr. ref.-no.
	1	Leckageventil Leakage valve **	20-37-068/
1	1	Gehäuse Leckageventil Housing leakage valve	21-08-002/47
2	1	Kolben Piston	15-29-102/93
3	1	Deckel Leckageventil Cover for leakage valve	21-20-002/17
4	1	Dichtung Seal	58-01-085/63
5	1	O-Ring 15,3-2,4 O-ring	58-06-052/64
6	1	Feder Leckageventil Spring leakage valve	60-07-002/13
7	1	O-Ring 8,5-1,8 * O-ring	58-06-025/
8	1	O-Ring 6,0-3,0 * O-ring	58-06-016/